anova

SG1C - SG2C

(2018)

A

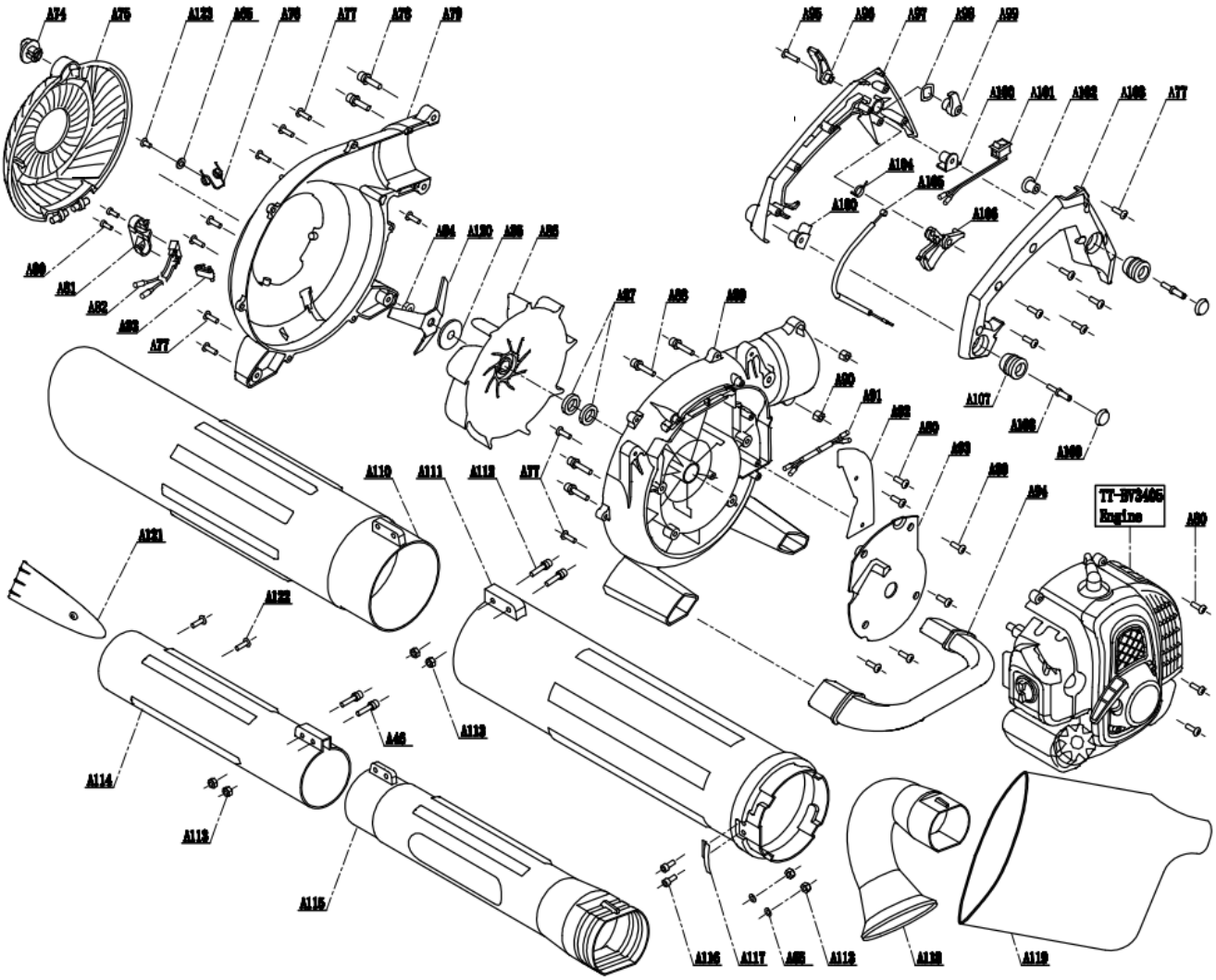
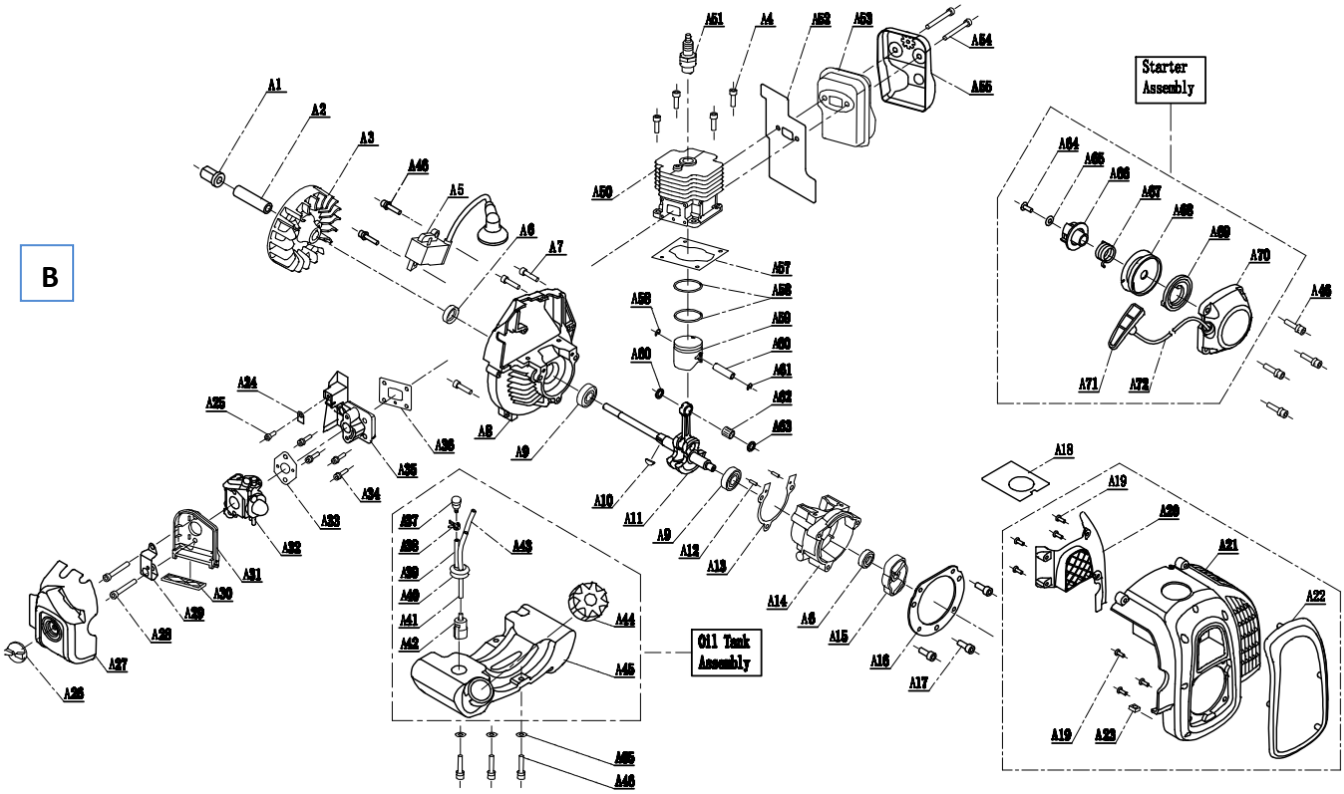
B