HEAT SEALING

Profi 1n

The benchtop tray sealer PROFI 1N adopts a trays system that allows the use of two types of gastronomy trays of the following dimensions:
95x137 - 137x190 with a maximum depth of 10cm.
Preformed silicone seals, protected resistance and shaped according to the tray to be used.
Guarantees excellent welding even in the presence of grease or grease.



Technical specifications

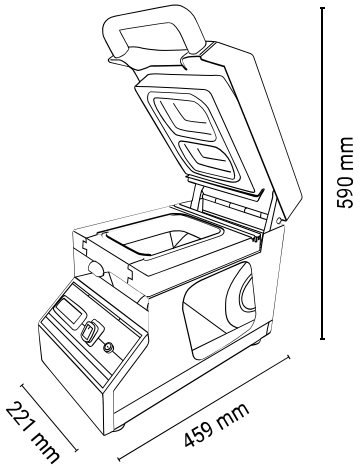

IT CAN PACK:

Liquids	Solids	Delicate foods

BODYWORK
Stainless steel

DIMENSIONS
221 x 447 x 326h mm

WEIGHT
14 Kg

VOLTAGE
220-240V / 50-60Hz - 340W

SHELF MOULD
1x 137x190 mm - 1x 137x95 mm

INSTALLATION
counter top

Details



Film Cutting Blade

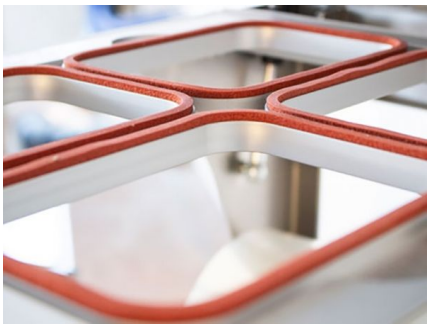

COMPACT DESIGN



Uniform sealing

Kits

Slide system

Clear trays