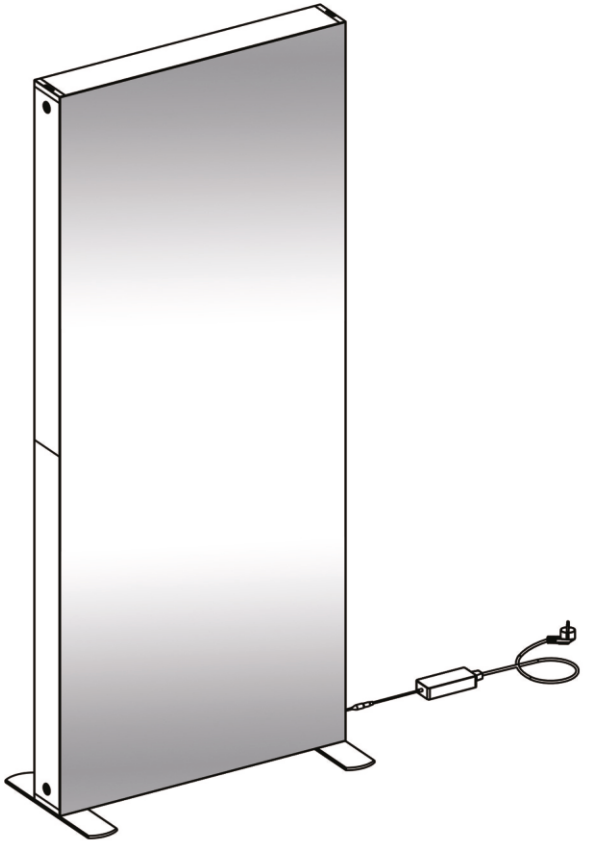

SEGO W100cm

Horizontal Profile x2

Vertical Profile Top x2

Vertical Profile Bottom x2

Mid Pole x1

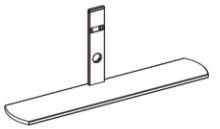

Foot x2

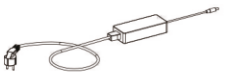

Transformer x1

Y-Cable x1

①

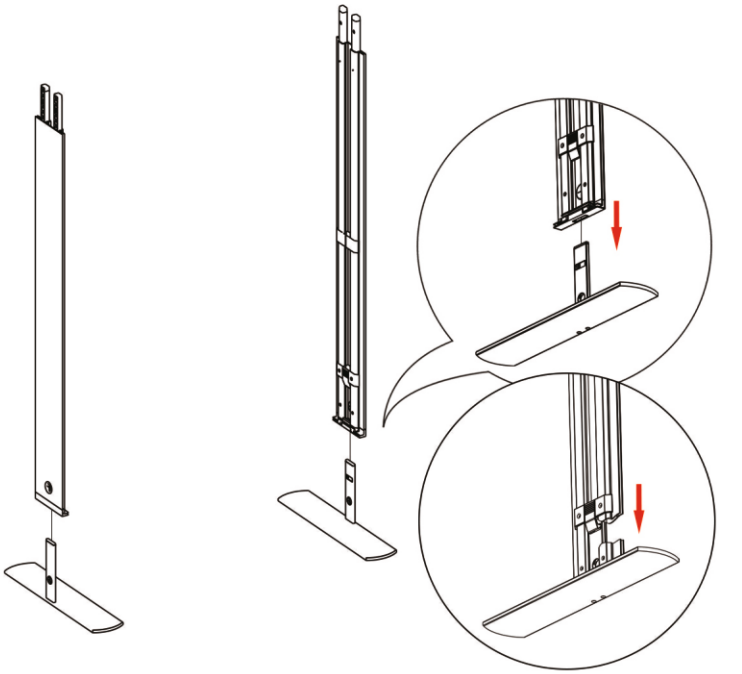

②

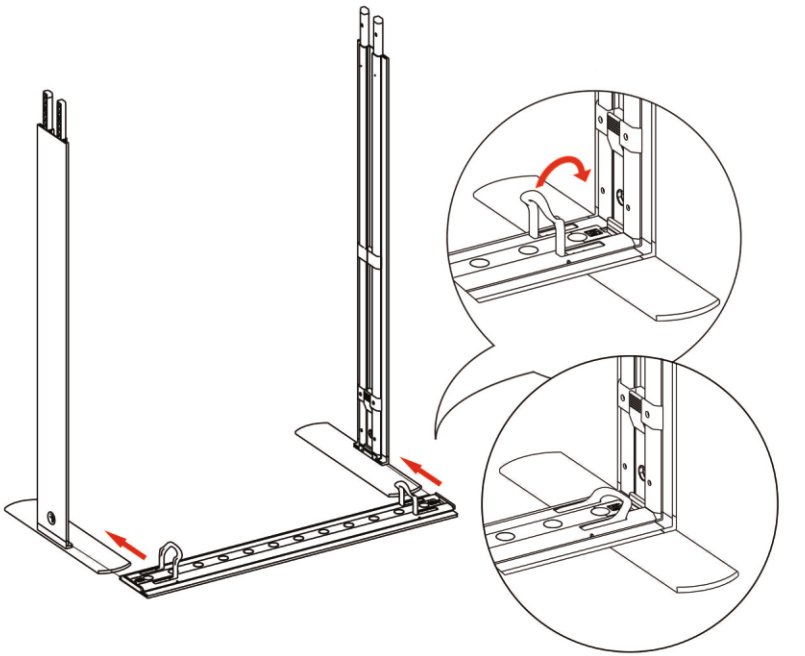

③

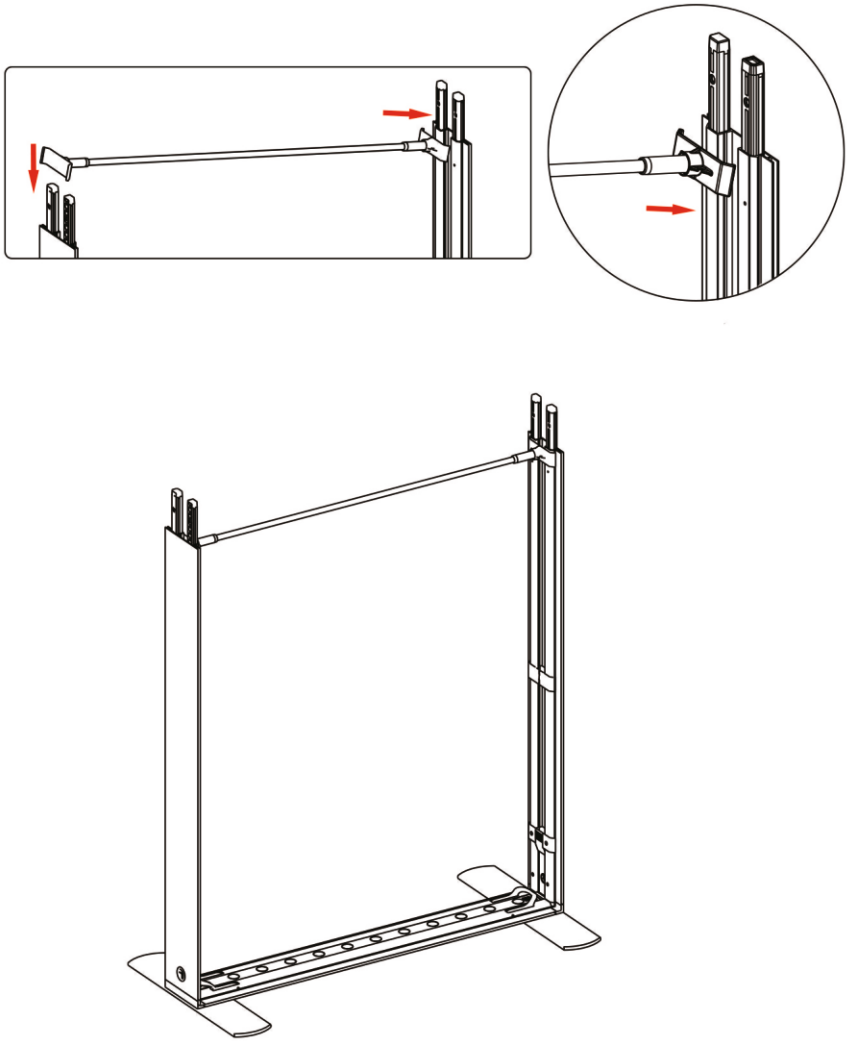

④

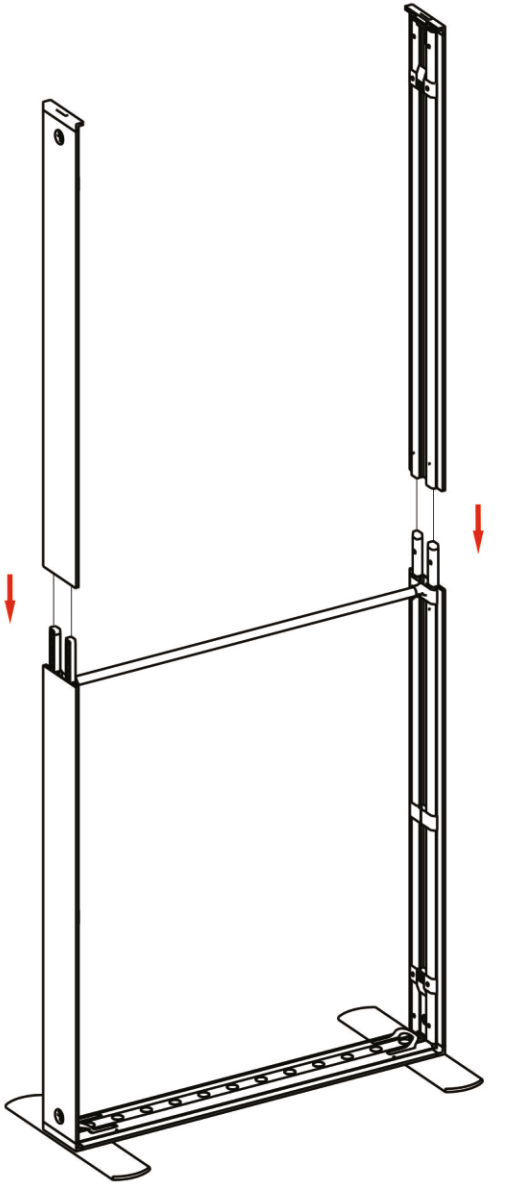

⑤

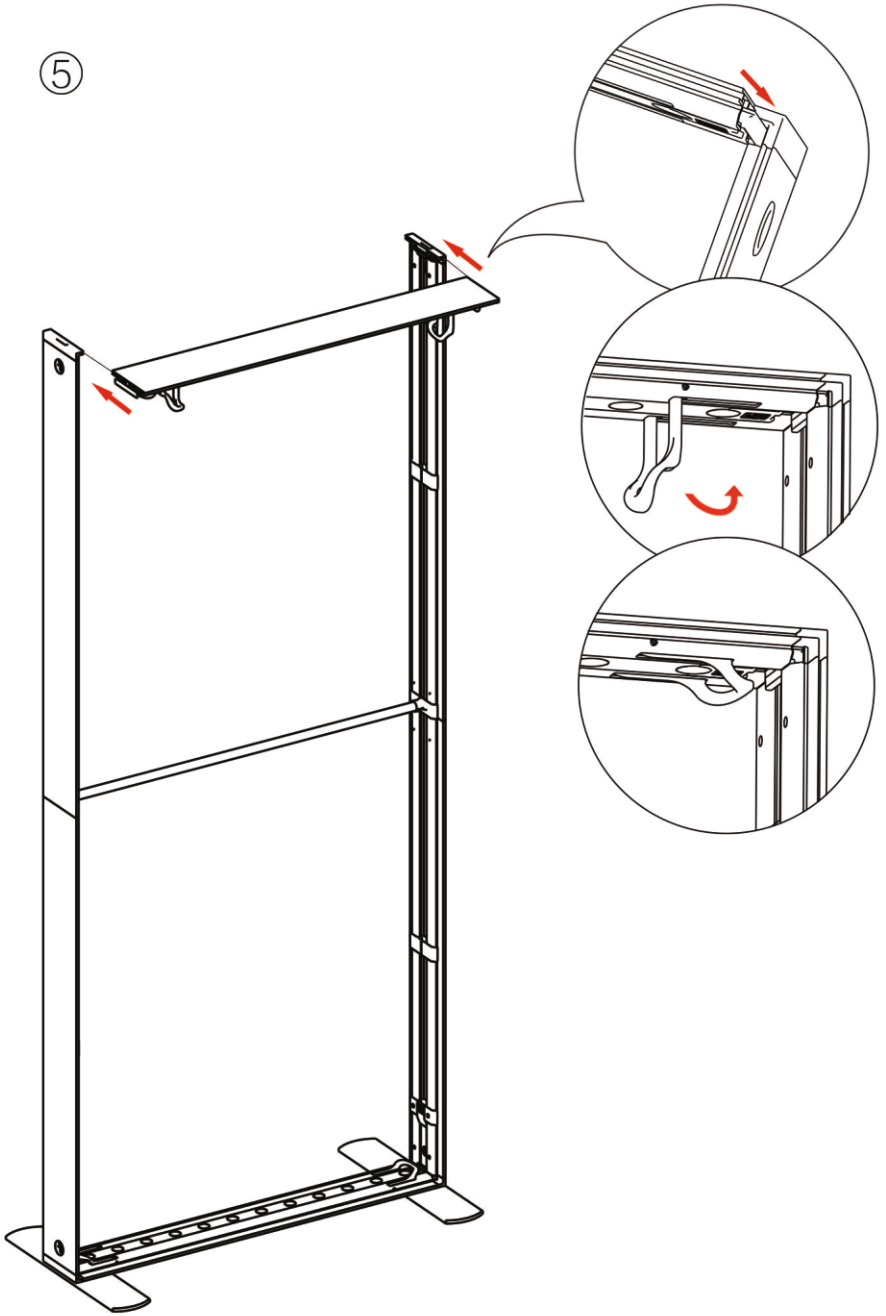

⑥

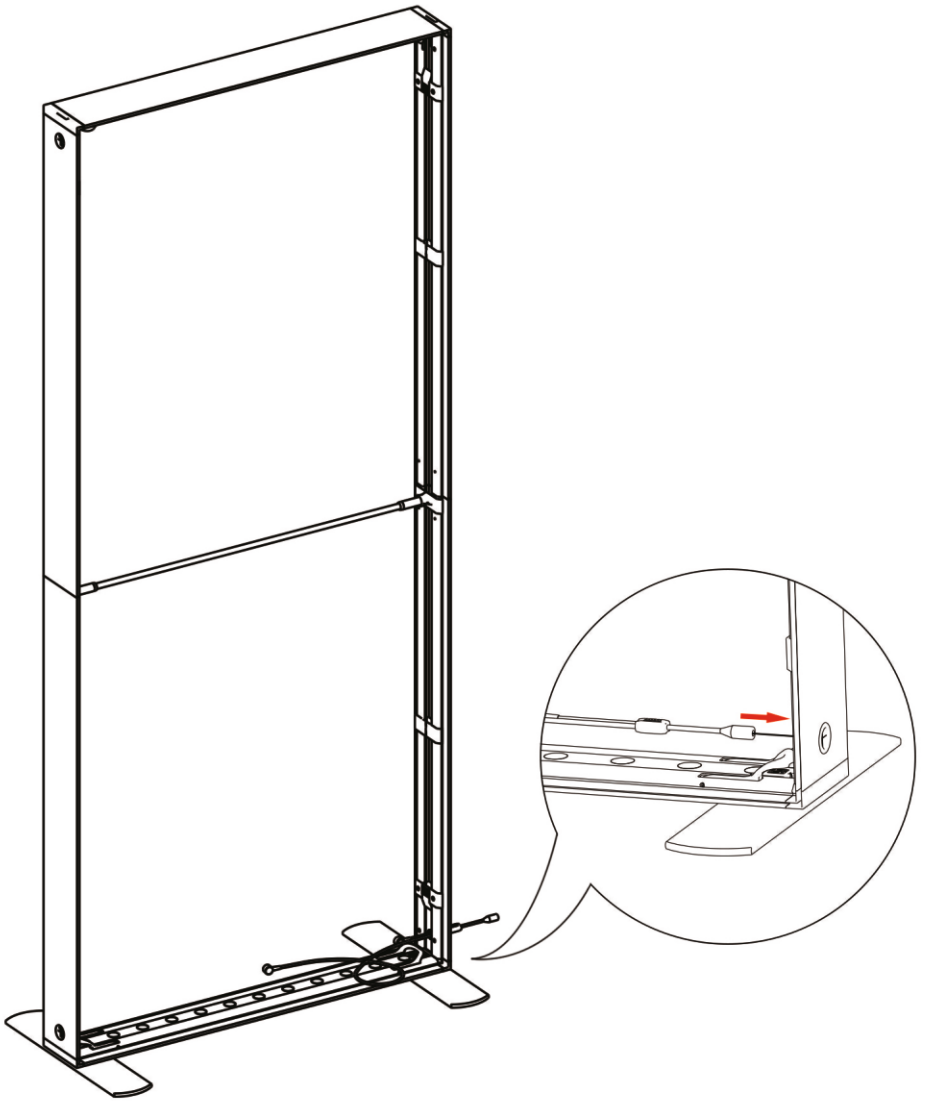

⑦

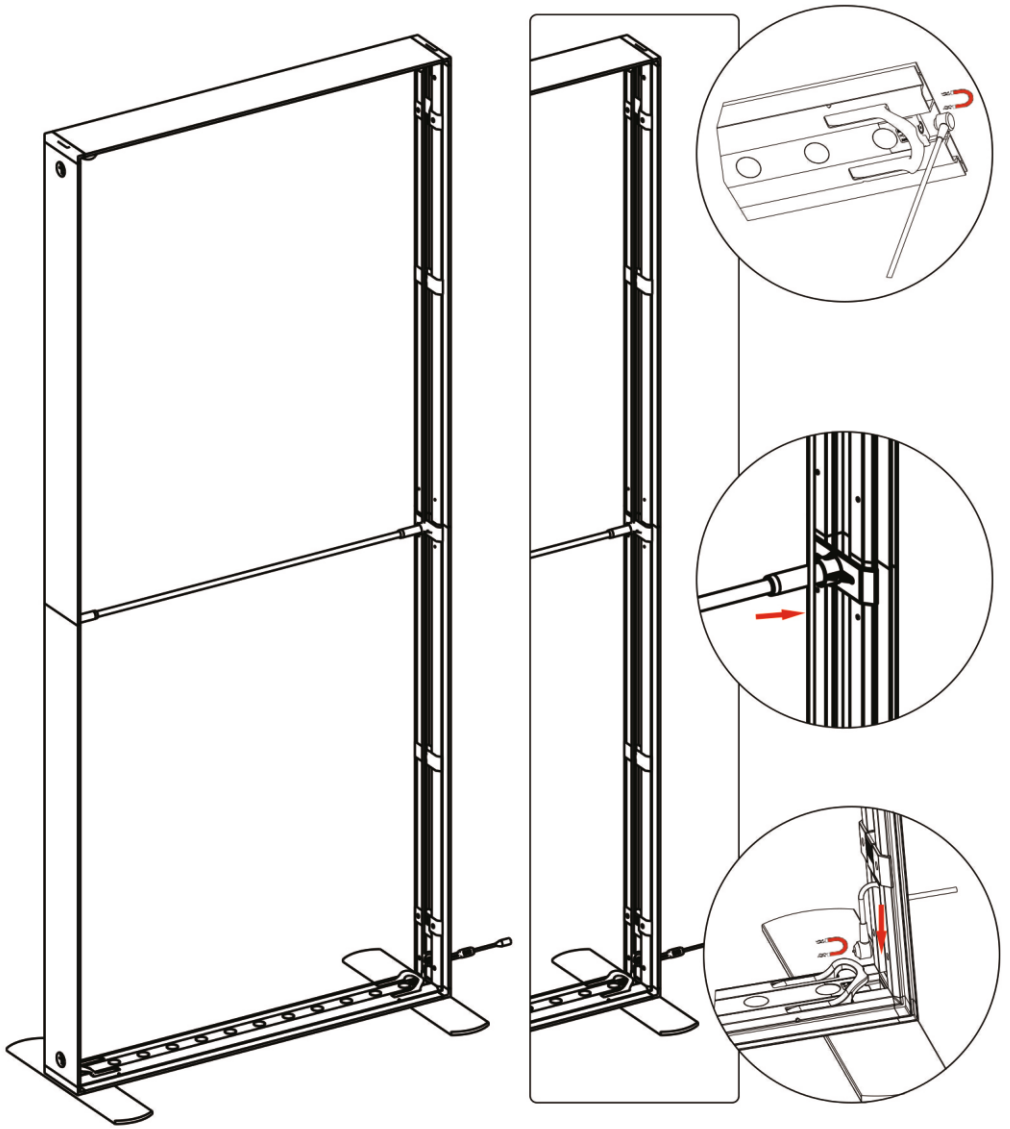

⑧

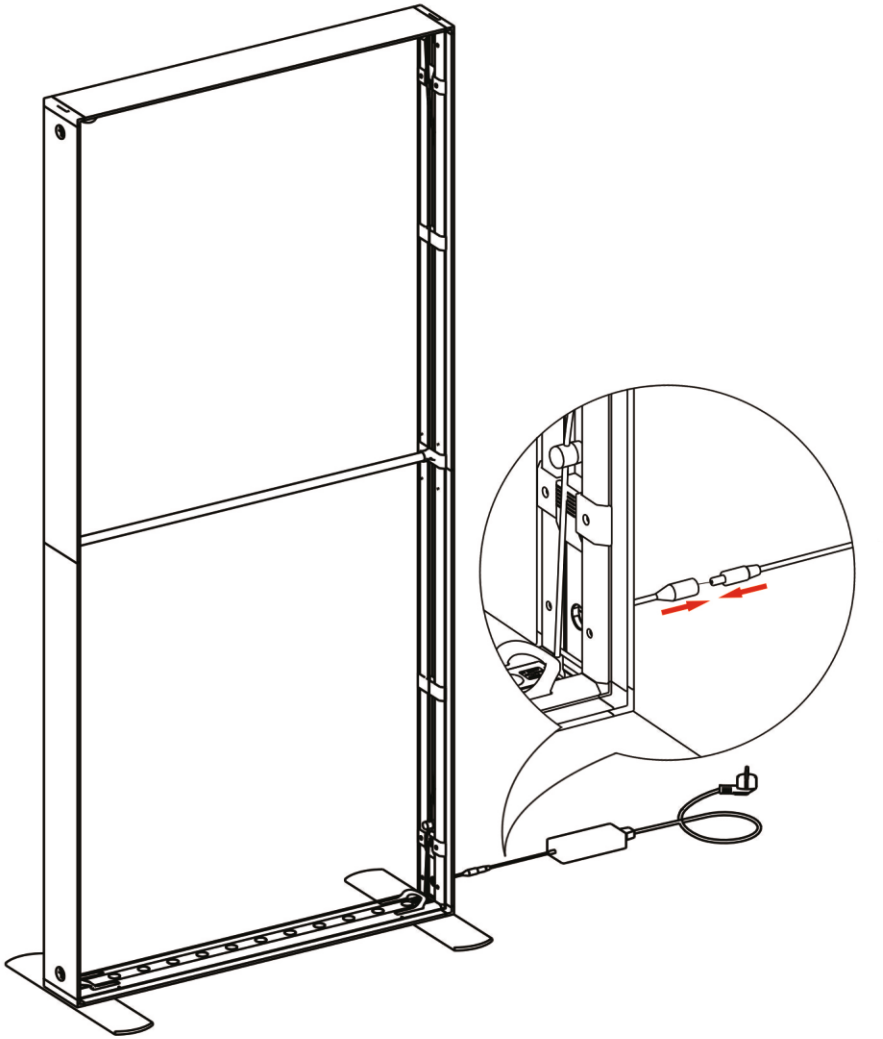

⑨

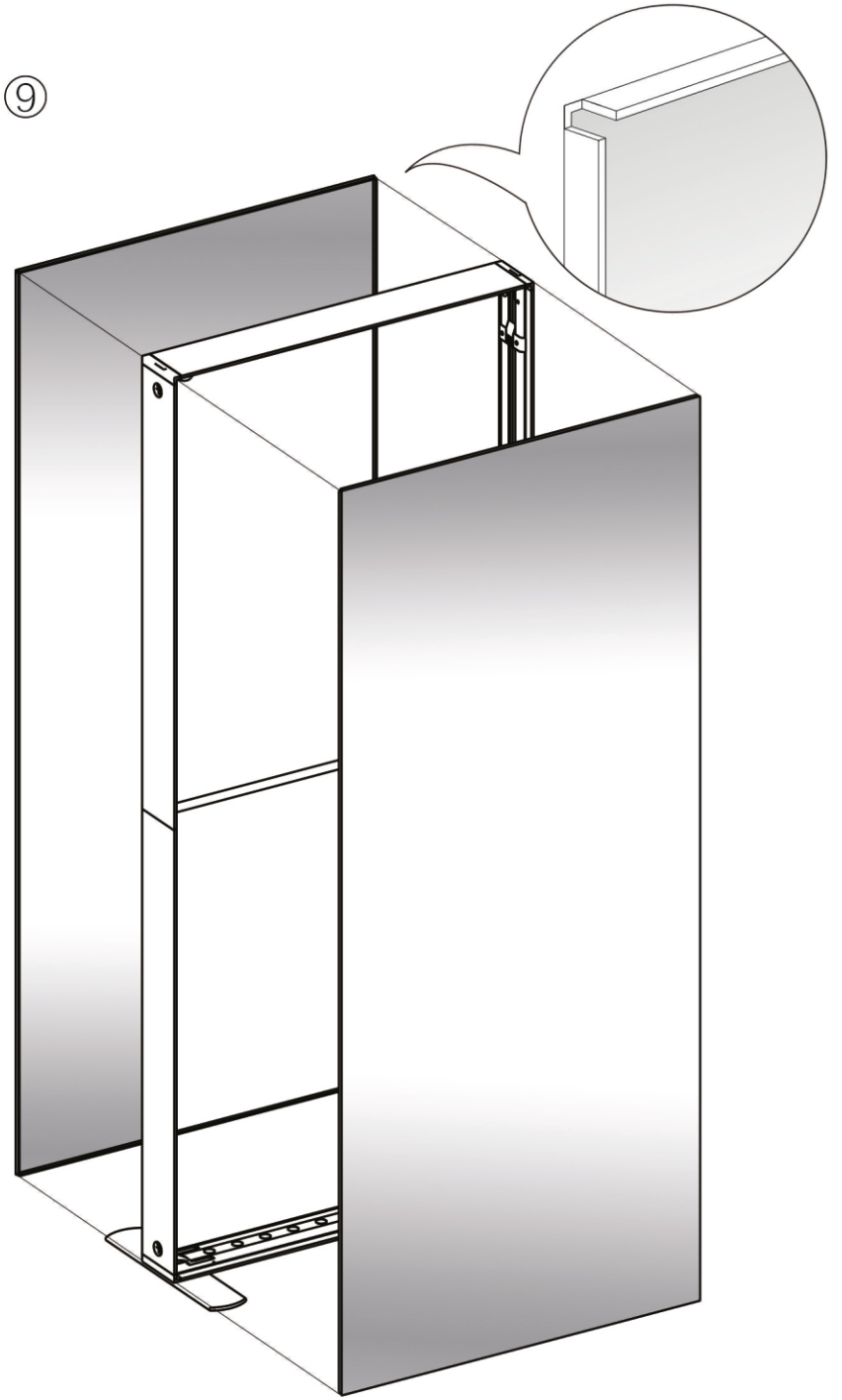

⑩

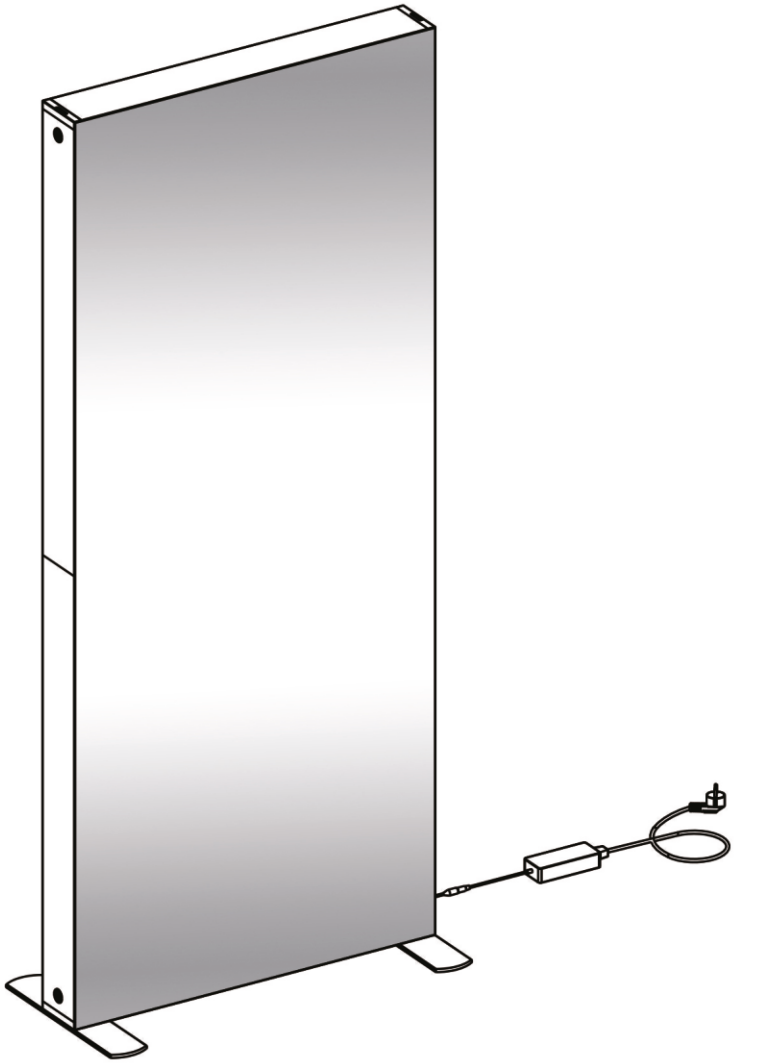

Arch Frame connection

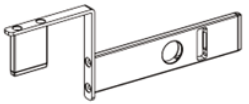

4 x Bridge Connector

2 x Support Bar for top
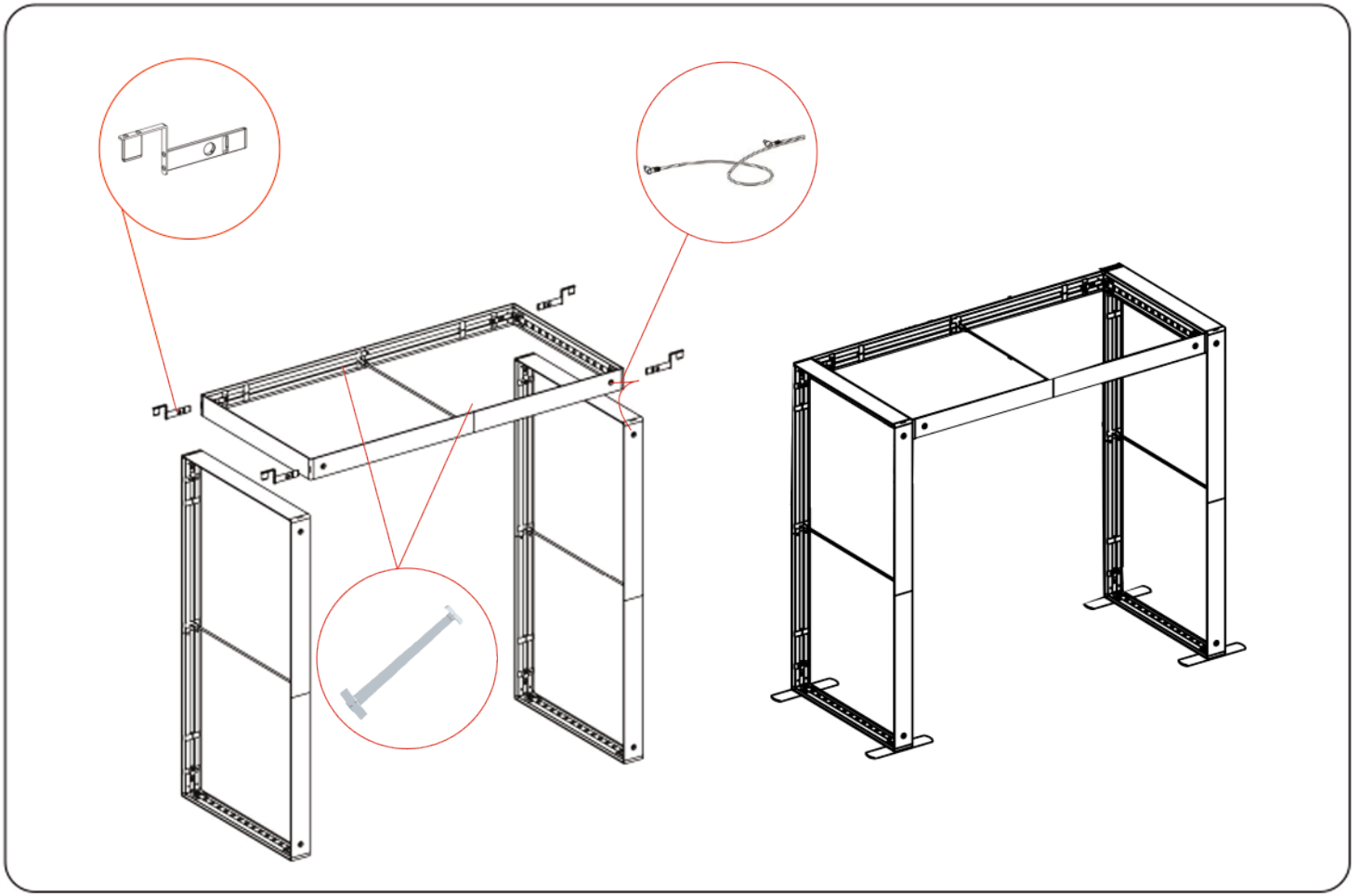
1 x 5m Cable