R.U.P.E.S. spa
Realizzazione Utensili
Pneumatici Elettrici Speciali
sede operativa: via Marconi, 3A
20080 Vermezzo (MI) - Italy
tel.: ++39.02.946941
fax.: ++39.02.94941040
e-mail: info_rupes@rupes.it

web: www.rupes.com
cod.fisc. e part. IVA: IT 05094230157
cap.sociale: euro 2.100.000 int.vers.
REA: MI-1163819
Reg. Imprese n. 0509430157
sede legale: v.le Bianca Maria, 13 - Milano
REG. RAEE: IT08020000000741
REG. PILE: IT09060P00000205

RUPES

LUCIDATRICE ROTORBITALI
RANDOM-ORBITAL POLISHER

LHR21III

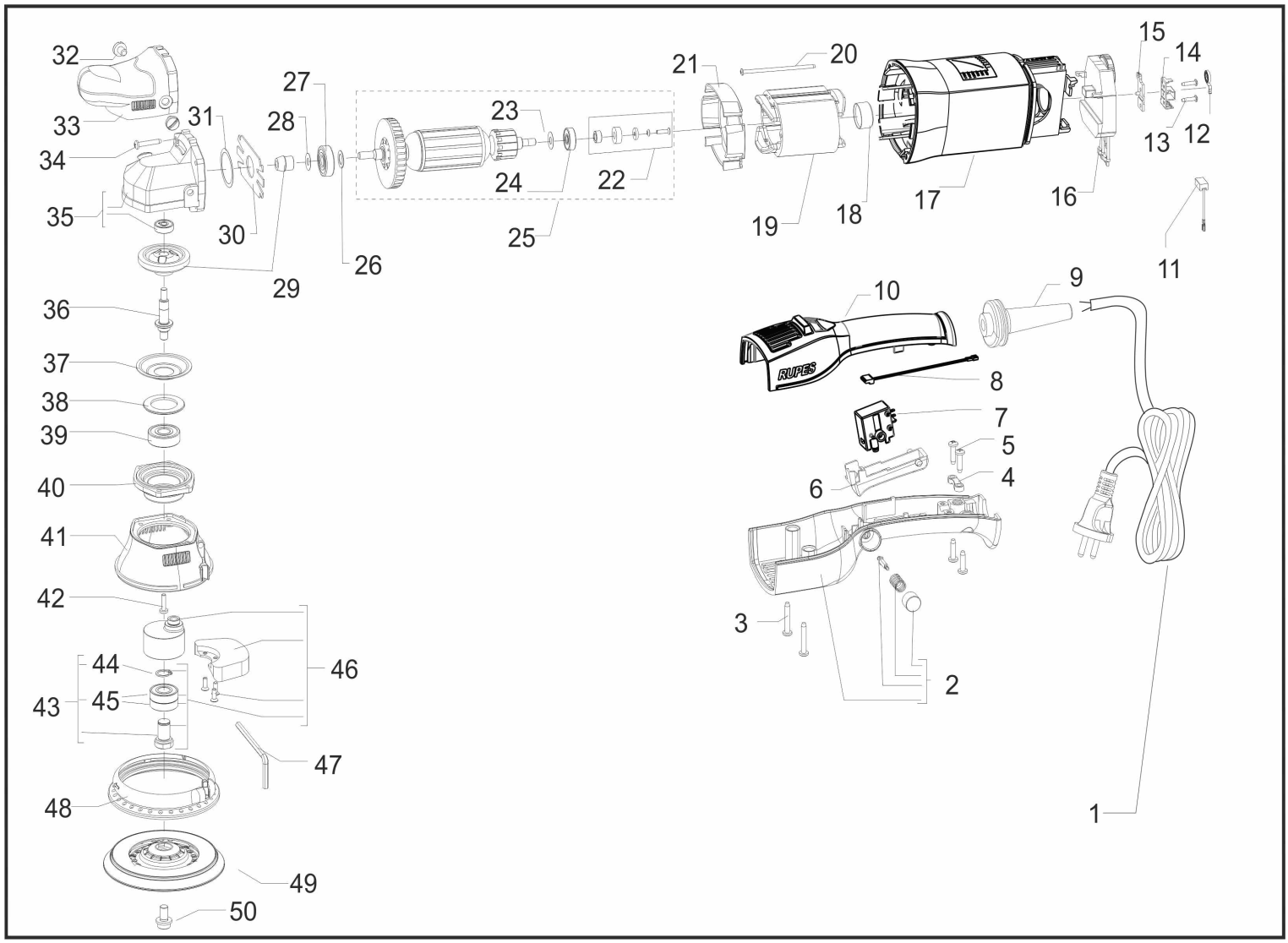

RUPES

R.U.P.E.S. spa
Realizzazione Utensili
Pneumatici Elettrici Speciali
sede operativa: via Marconi, 3A
20080 Vermezzo (MI) - Italy
tel.: ++39.02.946941
fax.: ++39.02.94941040
e-mail: info_rupes@rupes.it

web: www.rupes.com
cod.fisc. e part. IVA: IT 05094230157
cap.sociale: euro 2.100.000 int.vers.
REA: MI-1163819
Reg. Imprese n. 0509430157
sede legale: v.le Bianca Maria, 13 - Milano
REG. RAEE: IT08020000000741
REG. PILE: IT09060P00000205

ID	ITEM	DESCRIPTION
001	9C2X1,0N489	CABLE 2X1 (plug Schuko d4,8) mt.9 H07RN-F FLEX
001	9C2X1,25VJA9	CABLE 2x1,25 (plug JAPAN) mt.9
001	9C2X0,8VUS9	CAVO 2x18AWG spina AMERICANA polarizzata R21 9mt.
001	9C2X1,0NGB9FOR	CABLE 2X1 (plug UK) with fork H07RN-F CENTRAL METAL PLUG mt.9
001	9C2X1,0NAU9FOR	CABLE 2X1 (plug Australia) H07RN-F mt.9
001	9C2X1,0RCN9	CAVO 2x1 (CCC) (spina Cina) mt.9
001	9C2X1,0R409FOR	CABLE 2X1 (plug D4) H07RN-F mt.9 with fork (only Swiss)
002	44.374/C	COMPLETE LOWER HANDLE
003	9.552/50	SCREW 3,9x25 (7x1") T.C.C. / 50 pcs
004	442.55	CABLE CLAMP
005	9.660	SCREW 3,9x16 (7x5/8") T.C.C.
006	38.374/C	SWITCH BUTTON
007	45.372	GRADUAL SWITCH
008	408.374/C	SWITCH WIRING
009	42.290	CABLE SLEEVE SS31TE
010	441.374/C	IMPUGNATURA GOMMATA SUPERIORE COMPLETA
011	47.105/10	BLISTER WITH 10 PC. BRUSHES BA215
012	461.105	SPRING BRUSH HOLDER BA21 BURNISHED
013	9.551	SCREW 2,9x13 (4x1/2") T.C.C.
014	46.105	BRUSH HOLDER BA215-LH18ENS
015	462.105	BRUSH HOLDER PLATE
016	400.394/60HZ/C	ELECTRONIC MODULE LHR21III 60HZ
016	400.394/C	ELECTRONIC MODULE
017	31.394/C	MOTOR BODY LHR21 MARK III
018	268.105	BEARING CAP
019	2.394/230S	STATOR (V.230)
019	2.394/120S	STATOR (V.120)
019	2.394/100S	STATOR (V.100)
020	9.787	SCREW 2,9x70 T.C.C.
021	73.322	AIR BULKHEAD
022	405.322/C	COMPLETE MAGNET
023	9.318/50	STEEL WASHER d15 x 6,1 s 0,15 / 50 pcs
024	9.14/10	BEARING 626ZZ
025	1.382/230S/C	ROTOR (ARMATURE) 230V
025	1.382/120S/C	ROTOR (ARMATURE) 120V
025	1.382/100S/C	ROTOR (V.100)
026	9.298/50	STEEL WASHER d15 x 9,1 s 0,5 / 50 pcs
027	9.187/10	BEARING 629 2BRS R66 FA227
028	9.318/50	STEEL WASHER d15 x 6,1 s 0,15 / 50 pcs
029	50.245	GEAR SET
030	351.105	MOTOR BODY LITTLE COVER
031	9.364	STEEL WASHER d25,9x21 s 0,1
032	812.91	SCREW M8 x 15 T.C.IN NYLON A T.
033	814.394/C	COMPLETE FRONT HOUSING LHR21 MarkIII
034	9.679	SCREW 4,2x25 (8x1") T.C.C.
035	32.326/C	GEAR BOX
036	51.245	SPINDLE SHAFT
037	35.105	FLANGE PLATE BA21-SL41
038	54.245	SPACER GEAR BOX
039	9.184/10	BEARING 6201 2BRS R66 FA227
040	33.245	FLANGE
041	65.245	PROTECTIVE CAP
042	9.835	SCREW M4 x 20 T.C.C. 8G BURNISHED +
043	56.245N/C	ECCENTRIC SHAFT ASSEMBLY
044	9.102	SEEGER d 12 TIPO E DIN 471 CR3 PHOSPHATE
045	9.182/10	BEARING 6001 DDWCM J NS75Z

RUPES

R.U.P.E.S. spa
Realizzazione Utensili
Pneumatici Elettrici Speciali
sede operativa: via Marconi, 3A
20080 Vermezzo (MI) - Italy
tel.: ++39.02.946941
fax.: ++39.02.94941040
e-mail: info_rupes@rupes.it

web: www.rupes.com
cod.fisc. e part. IVA: IT 05094230157
cap.sociale: euro 2.100.000 int.vers.
REA: MI-1163819
Reg. Imprese n. 0509430157
sede legale: v.le Bianca Maria, 13 - Milano
REG. RAEE: IT08020000000741
REG. PILE: IT09060P00000205

ID	ITEM	DESCRIPTION
046	58.245N/C	ECCENTRIC ASSEMBLY
047	9.1395	ALLEN SPANNER 5mm
048	651.245	RUBBER SHROUD LHR21
049	981.321N/50	BOX 50pcs Ø 150mm PAD VELCRO M8 FOR LHR21ES
049	981.321N/5	BOX 5pcs Ø 150mm PAD VELCRO M8 FOR LHR21ES
050	9.715	SCREW M8 x 16 T.B. ZINC-PLATED WITH WASHER