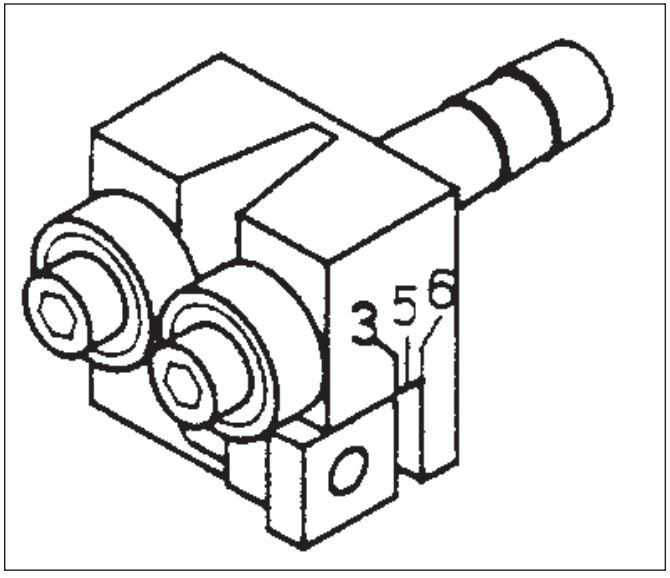

PROXXON *MBS 240/E*

	Diamantiertes Sägeband					Stahlsägeband										
	Steine, Halbedelsteine	Fliesen	Keramik	Glas	GFK (glasfaserverstärkt)	Weichholz	Hartholz	Acrylglas	Polystyrol	ABS	PVC	Aluminium	Kupfer	Messing	Stahl	Regelstufe
																6
																5
																4
																3
																2
																1

Blade guides

(see sketch above)

Triple ball bearing system with feed pipe for coolant when used with the diamond blade. Can also be used in conjunction with normal blades.

No 28 187