xx555 Precision Timers

1 Features

- Timing From Microseconds to Hours
- Astable or Monostable Operation
- Adjustable Duty Cycle
- TTL-Compatible Output Can Sink or Source Up to 200 mA
- On Products Compliant to MIL-PRF-38535, All Parameters Are Tested Unless Otherwise Noted. On All Other Products, Production Processing Does Not Necessarily Include Testing of All Parameters.

2 Applications

- Fingerprint Biometrics
- Iris Biometrics
- RFID Reader

3 Description

These devices are precision timing circuits capable of producing accurate time delays or oscillation. In the time-delay or mono-stable mode of operation, the timed interval is controlled by a single external resistor and capacitor network. In the a-stable mode of operation, the frequency and duty cycle can be controlled independently with two external resistors and a single external capacitor.

The threshold and trigger levels normally are two-thirds and one-third, respectively, of V_{CC}. These levels can be altered by use of the control-voltage terminal. When the trigger input falls below the trigger level, the flip-flop is set, and the output goes high. If the trigger input is above the trigger level and the threshold input is above the threshold level, the flip-flop is reset and the output is low. The reset (RESET) input can override all other inputs and can be used to initiate a new timing cycle. When RESET goes low, the flip-flop is reset, and the output goes low. When the output is low, a low-impedance path is provided between discharge (DISCH) and ground.

The output circuit is capable of sinking or sourcing current up to 200 mA. Operation is specified for supplies of 5 V to 15 V. With a 5-V supply, output levels are compatible with TTL inputs.

Device Information(1)

PART NUMBER	PACKAGE	BODY SIZE (NOM)
xx555	PDIP (8)	9.81 mm × 6.35 mm
	SOP (8)	6.20 mm × 5.30 mm
	TSSOP (8)	3.00 mm × 4.40 mm
	SOIC (8)	4.90 mm × 3.91 mm

(1) For all available packages, see the orderable addendum at the end of the datasheet.

4 Simplified Schematic

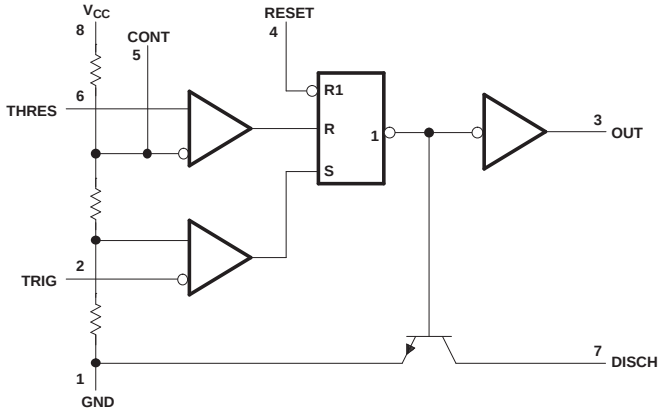

An IMPORTANT NOTICE at the end of this data sheet addresses availability, warranty, changes, use in safety-critical applications, intellectual property matters and other important disclaimers. PRODUCTION DATA.

Table of Contents

1 Features ... 1
2 Applications ... 1
3 Description ... 1
4 Simplified Schematic ... 1
5 Revision History ... 2
6 Pin Configuration and Functions ... 3
7 Specifications ... 4
7.1 Absolute Maximum Ratings ... 4
7.2 Handling Ratings ... 4
7.3 Recommended Operating Conditions ... 4
7.4 Electrical Characteristics ... 5
7.5 Operating Characteristics ... 6
7.6 Typical Characteristics ... 7
8 Detailed Description ... 9
8.1 Overview ... 9
8.2 Functional Block Diagram ... 9
8.3 Feature Description ... 9
8.4 Device Functional Modes ... 12
9 Applications and Implementation ... 13
9.1 Application Information ... 13
9.2 Typical Applications ... 13
10 Power Supply Recommendations ... 18
11 Device and Documentation Support ... 19
11.1 Related Links ... 19
11.2 Trademarks ... 19
11.3 Electrostatic Discharge Caution ... 19
11.4 Glossary ... 19
12 Mechanical, Packaging, and Orderable Information ... 19

5 Revision History

Changes from Revision H (June 2010) to Revision I — **Page**

- Updated document to new TI enhanced data sheet format. ... 1
- Deleted Ordering Information table. ... 1
- Added Military Disclaimer to Features list. ... 1
- Added Applications. ... 1
- Added Device Information table. ... 1
- Moved T_{stg} to Handling Ratings table. ... 4
- Added DISCH switch on-state voltage parameter. ... 5
- Added Device and Documentation Support section. ... 19
- Added ESD warning. ... 19
- Added Mechanical, Packaging, and Orderable Information section. ... 19

Copyright © 1973–2014, Texas Instruments Incorporated

6 Pin Configuration and Functions

NA555...D OR P PACKAGE
NE555...D, P, PS, OR PW PACKAGE
SA555...D OR P PACKAGE
SE555...D, JG, OR P PACKAGE
(TOP VIEW)

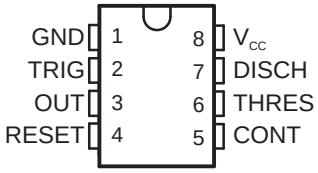

SE555...FK PACKAGE
(TOP VIEW)

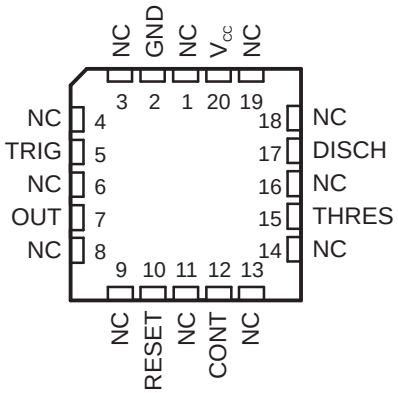

NC – No internal connection

Pin Functions

PIN			I/O	DESCRIPTION
NAME	D, P, PS, PW, JG	FK		
	NO.			
CONT	5	12	I/O	Controls comparator thresholds, Outputs 2/3 VCC, allows bypass capacitor connection
DISCH	7	17	O	Open collector output to discharge timing capacitor
GND	1	2	–	Ground
NC		1, 3, 4, 6, 8, 9, 11, 13, 14, 16, 18, 19	–	No internal connection
OUT	3	7	O	High current timer output signal
RESET	4	10	I	Active low reset input forces output and discharge low.
THRES	6	15	I	End of timing input. THRES > CONT sets output low and discharge low
TRIG	2	5	I	Start of timing input. TRIG < ½ CONT sets output high and discharge open
V_{CC}	8	20	–	Input supply voltage, 4.5 V to 16 V. (SE555 maximum is 18 V)

Copyright © 1973–2014, Texas Instruments Incorporated

7 Specifications

7.1 Absolute Maximum Ratings[1]

over operating free-air temperature range (unless otherwise noted)

			MIN	MAX	UNIT
V_{CC}	Supply voltage[2]			18	V
V_I	Input voltage	CONT, RESET, THRES, TRIG		V_{CC}	V
I_O	Output current			±225	mA
θ_{JA}	Package thermal impedance[3][4]	D package		97	°C/W
		P package		85	
		PS package		95	
		PW package		149	
θ_{JC}	Package thermal impedance[5][6]	FK package		5.61	°C/W
		JG package		14.5	
T_J	Operating virtual junction temperature			150	°C
	Case temperature for 60 s	FK package		260	°C
	Lead temperature 1,6 mm (1/16 in) from case for 60 s	JG package		300	°C

(1) Stresses beyond those listed under *Absolute Maximum Ratings* may cause permanent damage to the device. These are stress ratings only, and functional operation of the device at these or any other conditions beyond those indicated under *Recommended Operating Conditions* is not implied. Exposure to absolute-maximum-rated conditions for extended periods may affect device reliability.
(2) All voltage values are with respect to GND.
(3) Maximum power dissipation is a function of $T_J(max)$, θ_{JA}, and T_A. The maximum allowable power dissipation at any allowable ambient temperature is $P_D = (T_J(max) - T_A) / \theta_{JA}$. Operating at the absolute maximum T_J of 150°C can affect reliability.
(4) The package thermal impedance is calculated in accordance with JESD 51-7.
(5) Maximum power dissipation is a function of $T_J(max)$, θ_{JC}, and T_C. The maximum allowable power dissipation at any allowable case temperature is $P_D = (T_J(max) - T_C) / \theta_{JC}$. Operating at the absolute maximum T_J of 150°C can affect reliability.
(6) The package thermal impedance is calculated in accordance with MIL-STD-883.

7.2 Handling Ratings

PARAMETER	DEFINITION	MIN	MAX	UNIT
T_{stg}	Storage temperature range	–65	150	°C

7.3 Recommended Operating Conditions

over operating free-air temperature range (unless otherwise noted)

			MIN	MAX	UNIT
V_{CC}	Supply voltage	NA555, NE555, SA555	4.5	16	V
		SE555	4.5	18	
V_I	Input voltage	CONT, RESET, THRES, and TRIG		V_{CC}	V
I_O	Output current			±200	mA
T_A	Operating free-air temperature	NA555	–40	105	°C
		NE555	0	70	
		SA555	–40	85	
		SE555	–55	125	

Copyright © 1973–2014, Texas Instruments Incorporated

7.4 Electrical Characteristics

V_{CC} = 5 V to 15 V, T_A = 25°C (unless otherwise noted)

PARAMETER	TEST CONDITIONS		SE555			NA555 NE555 SA555			UNIT
			MIN	TYP	MAX	MIN	TYP	MAX	
THRES voltage level	V_{CC} = 15 V		9.4	10	10.6	8.8	10	11.2	V
	V_{CC} = 5 V		2.7	3.3	4	2.4	3.3	4.2	
THRES current(1)				30	250		30	250	nA
TRIG voltage level	V_{CC} = 15 V		4.8	5	5.2	4.5	5	5.6	V
		T_A = –55°C to 125°C	3		6				
	V_{CC} = 5 V		1.45	1.67	1.9	1.1	1.67	2.2	
		T_A = –55°C to 125°C			1.9				
TRIG current	TRIG at 0 V			0.5	0.9		0.5	2	µA
RESET voltage level			0.3	0.7	1	0.3	0.7	1	V
	T_A = –55°C to 125°C				1.1				
RESET current	RESET at V_{CC}			0.1	0.4		0.1	0.4	mA
	RESET at 0 V			–0.4	–1		–0.4	–1.5	
DISCH switch off-state current				20	100		20	100	nA
DISCH switch on-state voltage	V_{CC} = 5 V, I_O = 8 mA						0.15	0.4	V
CONT voltage (open circuit)	V_{CC} = 15 V		9.6	10	10.4	9	10	11	V
		T_A = –55°C to 125°C	9.6		10.4				
	V_{CC} = 5 V		2.9	3.3	3.8	2.6	3.3	4	
		T_A = –55°C to 125°C	2.9		3.8				
Low-level output voltage	V_{CC} = 15 V, I_{OL} = 10 mA			0.1	0.15		0.1	0.25	V
		T_A = –55°C to 125°C			0.2				
	V_{CC} = 15 V, I_{OL} = 50 mA			0.4	0.5		0.4	0.75	
		T_A = –55°C to 125°C			1				
	V_{CC} = 15 V, I_{OL} = 100 mA			2	2.2		2	2.5	
		T_A = –55°C to 125°C			2.7				
	V_{CC} = 15 V, I_{OL} = 200 mA			2.5			2.5		
	V_{CC} = 5 V, I_{OL} = 3.5 mA	T_A = –55°C to 125°C			0.35				
	V_{CC} = 5 V, I_{OL} = 5 mA			0.1	0.2		0.1	0.35	
		T_A = –55°C to 125°C			0.8				
	V_{CC} = 5 V, I_{OL} = 8 mA			0.15	0.25		0.15	0.4	
High-level output voltage	V_{CC} = 15 V, I_{OH} = –100 mA		13	13.3		12.75	13.3		V
		T_A = –55°C to 125°C	12						
	V_{CC} = 15 V, I_{OH} = –200 mA			12.5			12.5		
	V_{CC} = 5 V, I_{OH} = –100 mA		3	3.3		2.75	3.3		
		T_A = –55°C to 125°C	2						
Supply current	Output low, No load	V_{CC} = 15 V		10	12		10	15	mA
		V_{CC} = 5 V		3	5		3	6	
	Output high, No load	V_{CC} = 15 V		9	10		9	13	
		V_{CC} = 5 V		2	4		2	5	

(1) This parameter influences the maximum value of the timing resistors R_A and R_B in the circuit of Figure 12. For example, when V_{CC} = 5 V, the maximum value is R = R_A + R_B ≠ 3.4 MΩ, and for V_{CC} = 15 V, the maximum value is 10 MΩ.

Copyright © 1973–2014, Texas Instruments Incorporated

7.5 Operating Characteristics

V_{CC} = 5 V to 15 V, T_A = 25°C (unless otherwise noted)

PARAMETER		TEST CONDITIONS(1)	SE555			NA555 NE555 SA555			UNIT
			MIN	TYP	MAX	MIN	TYP	MAX	
Initial error of timing interval(2)	Each timer, monostable(3)	T_A = 25°C		0.5	1.5(4)		1	3	%
	Each timer, astable(5)			1.5			2.25		
Temperature coefficient of timing interval	Each timer, monostable(3)	T_A = MIN to MAX		30	100(4)		50		ppm/°C
	Each timer, astable(5)			90			150		
Supply-voltage sensitivity of timing interval	Each timer, monostable(3)	T_A = 25°C		0.05	0.2(4)		0.1	0.5	%/V
	Each timer, astable(5)			0.15			0.3		
Output-pulse rise time		C_L = 15 pF, T_A = 25°C		100	200(4)		100	300	ns
Output-pulse fall time		C_L = 15 pF, T_A = 25°C		100	200(4)		100	300	ns

(1) For conditions shown as MIN or MAX, use the appropriate value specified under recommended operating conditions.
(2) Timing interval error is defined as the difference between the measured value and the average value of a random sample from each process run.
(3) Values specified are for a device in a monostable circuit similar to Figure 9, with the following component values: R_A = 2 kΩ to 100 kΩ, C = 0.1 μF.
(4) On products compliant to MIL-PRF-38535, this parameter is not production tested.
(5) Values specified are for a device in an astable circuit similar to Figure 12, with the following component values: R_A = 1 kΩ to 100 kΩ, C = 0.1 μF.

Copyright © 1973–2014, Texas Instruments Incorporated

7.6 Typical Characteristics

Data for temperatures below –40°C and above 105°C are applicable for SE555 circuits only.

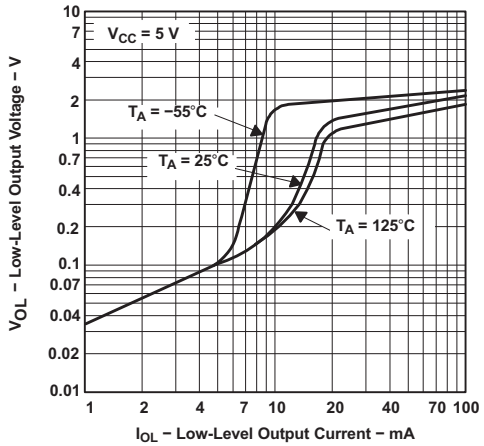

Figure 1. Low-Level Output Voltage vs Low-Level Output Current

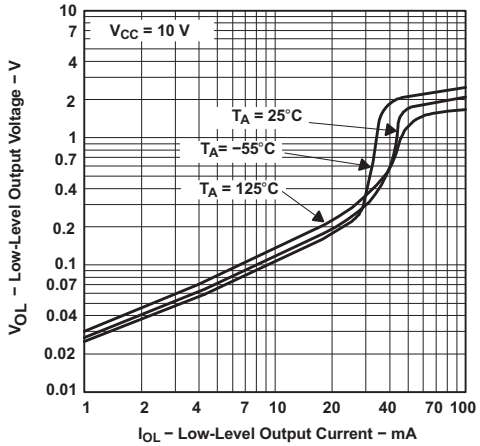

Figure 2. Low-Level Output Voltage vs Low-Level Output Current

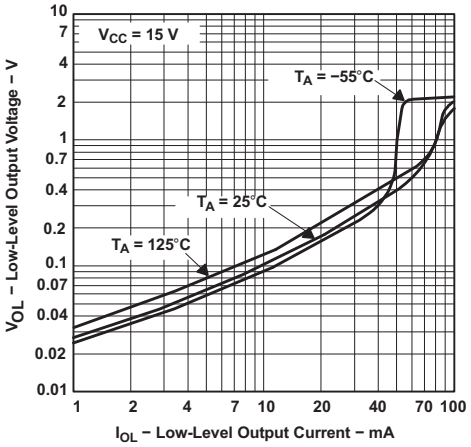

Figure 3. Low-Level Output Voltage vs Low-Level Output Current

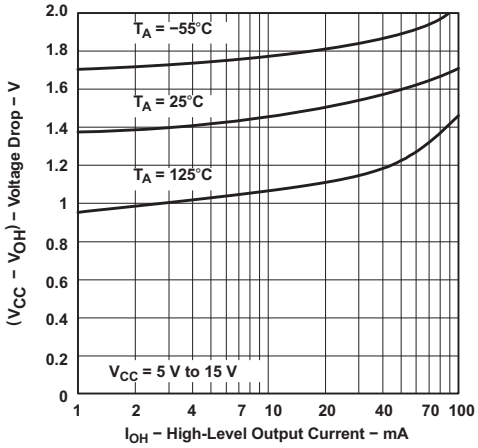

Figure 4. Drop Between Supply Voltage and Output vs High-Level Output Current

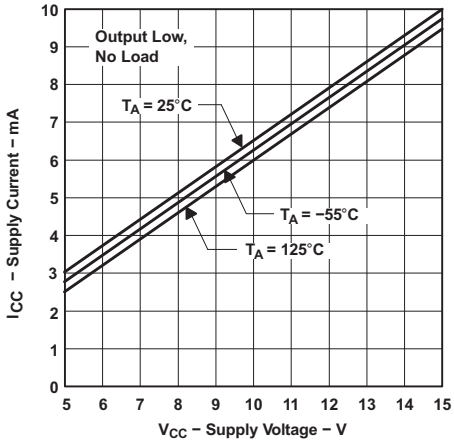

Figure 5. Supply Current vs Supply Voltage

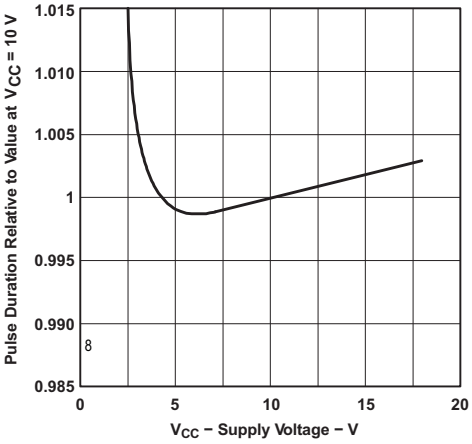

Figure 6. Normalized Output Pulse Duration (Monostable Operation) vs Supply Voltage

Typical Characteristics (continued)

Data for temperatures below –40°C and above 105°C are applicable for SE555 circuits only.

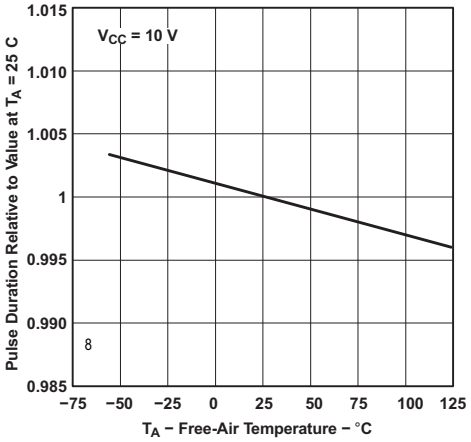

Figure 7. Normalized Output Pulse Duration (Monostable Operation) vs Free-Air Temperature

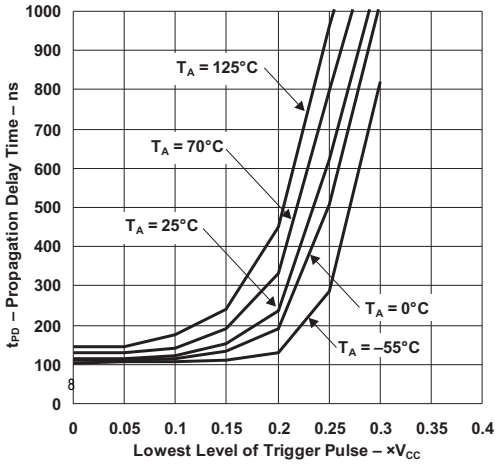

Figure 8. Propagation Delay Time vs Lowest Voltage Level of Trigger Pulse

Copyright © 1973–2014, Texas Instruments Incorporated

8 Detailed Description

8.1 Overview

The xx555 timer is a popular and easy to use for general purpose timing applications from 10 µs to hours or from < 1mHz to 100 kHz. In the time-delay or mono-stable mode of operation, the timed interval is controlled by a single external resistor and capacitor network. In the a-stable mode of operation, the frequency and duty cycle can be controlled independently with two external resistors and a single external capacitor. Maximum output sink and discharge sink current is greater for higher VCC and less for lower VCC.

8.2 Functional Block Diagram

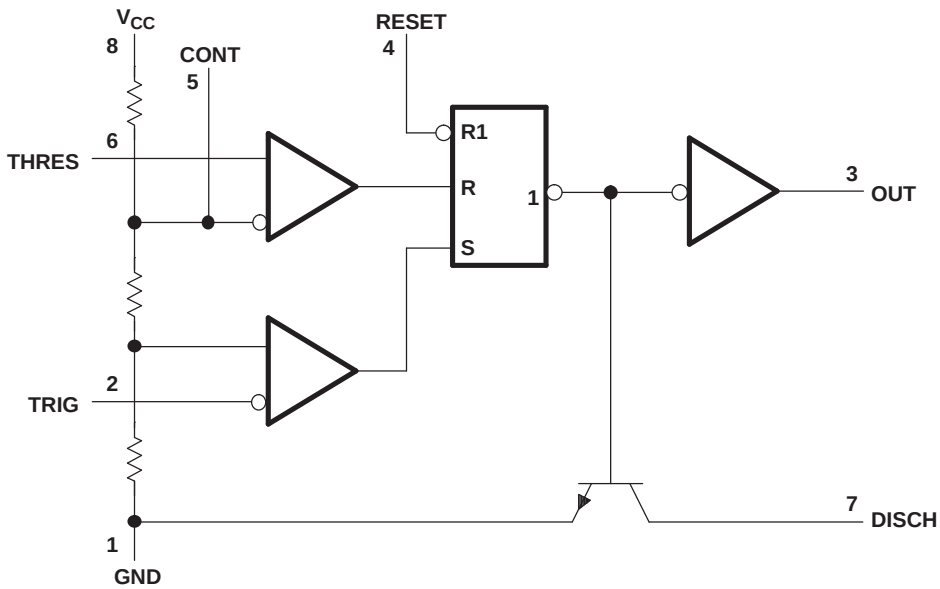

A. Pin numbers shown are for the D, JG, P, PS, and PW packages.

B. RESET can override TRIG, which can override THRES.

8.3 Feature Description

8.3.1 Mono-stable Operation

For mono-stable operation, any of these timers can be connected as shown in Figure 9. If the output is low, application of a negative-going pulse to the trigger (TRIG) sets the flip-flop ($\overline{Q}$ goes low), drives the output high, and turns off Q1. Capacitor C then is charged through R_A until the voltage across the capacitor reaches the threshold voltage of the threshold (THRES) input. If TRIG has returned to a high level, the output of the threshold comparator resets the flip-flop ($\overline{Q}$ goes high), drives the output low, and discharges C through Q1.

Feature Description (continued)

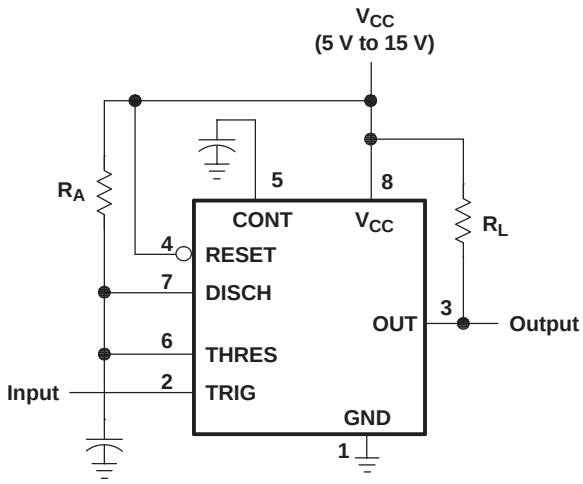

Pin numbers shown are for the D, JG, P, PS, and PW packages.

Figure 9. Circuit for Monostable Operation

Monostable operation is initiated when TRIG voltage falls below the trigger threshold. Once initiated, the sequence ends only if TRIG is high for at least 10 µs before the end of the timing interval. When the trigger is grounded, the comparator storage time can be as long as 10 µs, which limits the minimum monostable pulse width to 10 µs. Because of the threshold level and saturation voltage of Q1, the output pulse duration is approximately $t_w = 1.1R_AC$. Figure 11 is a plot of the time constant for various values of R_A and C. The threshold levels and charge rates both are directly proportional to the supply voltage, V_{CC}. The timing interval is, therefore, independent of the supply voltage, so long as the supply voltage is constant during the time interval.

Applying a negative-going trigger pulse simultaneously to RESET and TRIG during the timing interval discharges C and reinitiates the cycle, commencing on the positive edge of the reset pulse. The output is held low as long as the reset pulse is low. To prevent false triggering, when RESET is not used, it should be connected to V_{CC}.

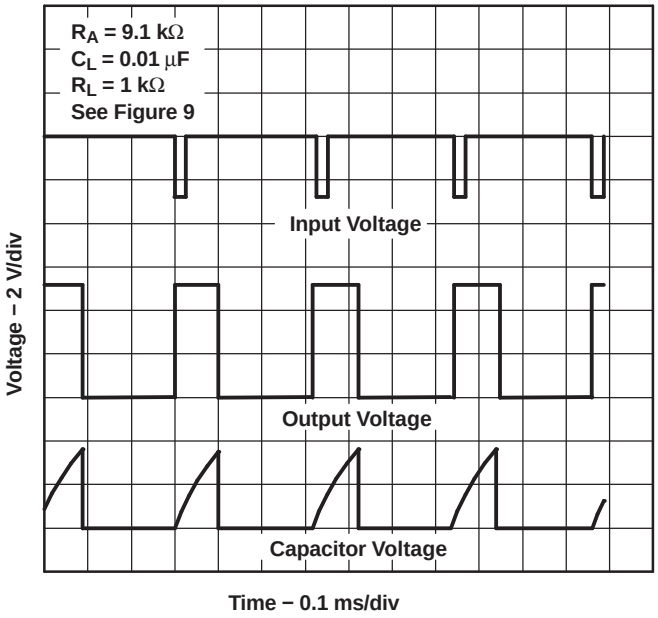

Figure 10. Typical Monostable Waveforms

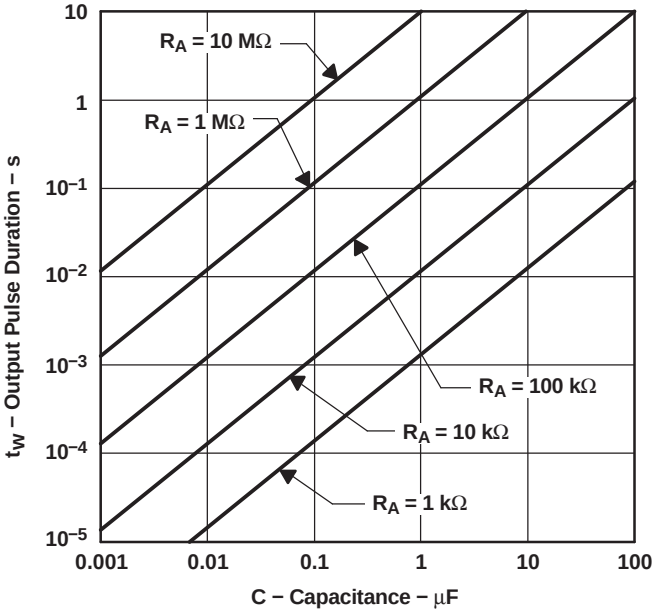

Figure 11. Output Pulse Duration vs Capacitance

Copyright © 1973–2014, Texas Instruments Incorporated

Feature Description (continued)

8.3.2 A-stable Operation

As shown in Figure 12, adding a second resistor, R_B, to the circuit of Figure 9 and connecting the trigger input to the threshold input causes the timer to self-trigger and run as a multi-vibrator. The capacitor C charges through R_A and R_B and then discharges through R_B only. Therefore, the duty cycle is controlled by the values of R_A and R_B.

This astable connection results in capacitor C charging and discharging between the threshold-voltage level (≈ 0.67 × V_{CC}) and the trigger-voltage level (≈ 0.33 × V_{CC}). As in the mono-stable circuit, charge and discharge times (and, therefore, the frequency and duty cycle) are independent of the supply voltage.

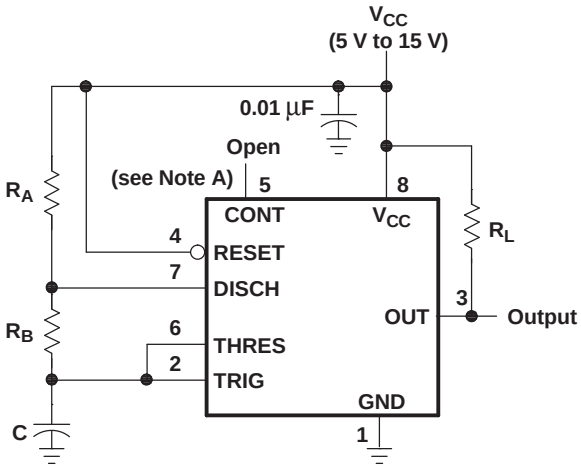

Pin numbers shown are for the D, JG, P, PS, and PW packages.
NOTE A: Decoupling CONT voltage to ground with a capacitor can improve operation. This should be evaluated for individual applications.

Figure 12. Circuit for Astable Operation

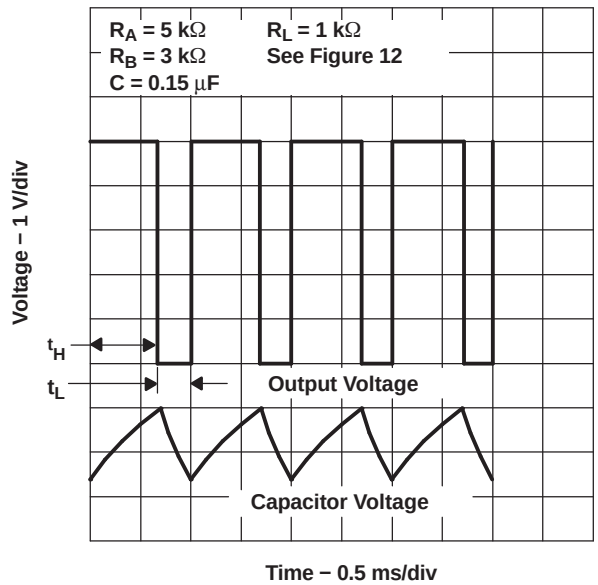

Figure 13. Typical Astable Waveforms

Figure 12 shows typical waveforms generated during astable operation. The output high-level duration t_H and low-level duration t_L can be calculated as follows:

$$t_H = 0.693(R_A + R_B)C \tag{1}$$

$$t_L = 0.693(R_B)C \tag{2}$$

Other useful relationships are shown below:

$$\text{period} = t_H + t_L = 0.693(R_A + 2R_B)C \tag{3}$$

$$\text{frequency} \approx \frac{1.44}{(R_A + 2R_B)C} \tag{4}$$

$$\text{Output driver duty cycle} = \frac{t_L}{t_H + t_L} = \frac{R_B}{R_A + 2R_B} \tag{5}$$

$$\text{Output waveform duty cycle} = \frac{t_H}{t_H + t_L} = 1 - \frac{R_B}{R_A + 2R_B} \tag{6}$$

$$\text{Low-to-high ratio} = \frac{t_L}{t_H} = \frac{R_B}{R_A + R_B} \tag{7}$$

Feature Description (continued)

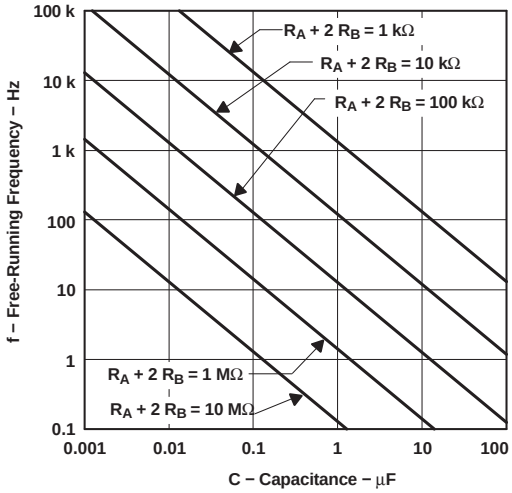

Figure 14. Free-Running Frequency

8.3.3 Frequency Divider

By adjusting the length of the timing cycle, the basic circuit of Figure 9 can be made to operate as a frequency divider. Figure 15 shows a divide-by-three circuit that makes use of the fact that re-triggering cannot occur during the timing cycle.

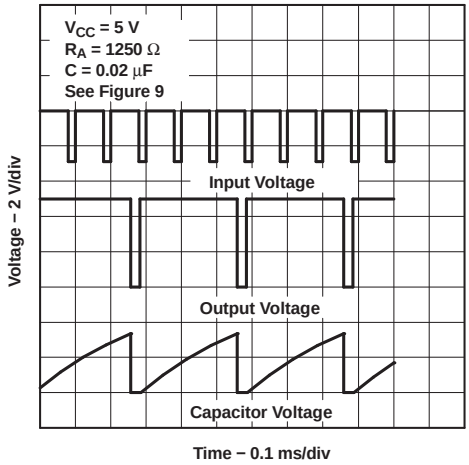

Figure 15. Divide-by-Three Circuit Waveforms

8.4 Device Functional Modes

Table 1. Function Table

RESET	TRIGGER VOLTAGE(1)	THRESHOLD VOLTAGE(1)	OUTPUT	DISCHARGE SWITCH
Low	Irrelevant	Irrelevant	Low	On
High	<1/3 V_{CC}	Irrelevant	High	Off
High	>1/3 V_{CC}	>2/3 V_{CC}	Low	On
High	>1/3 V_{CC}	<2/3 V_{CC}	As previously established	

(1) Voltage levels shown are nominal.

Copyright © 1973–2014, Texas Instruments Incorporated

9 Applications and Implementation

NOTE

Information in the following applications sections is not part of the TI component specification, and TI does not warrant its accuracy or completeness. TI's customers are responsible for determining suitability of components for their purposes. Customers should validate and test their design implementation to confirm system functionality.

9.1 Application Information

The xx555 timer devices use resistor and capacitor charging delay to provide a programmable time delay or operating frequency. This section presents a simplified discussion of the design process.

9.2 Typical Applications

9.2.1 Missing-Pulse Detector

The circuit shown in Figure 16 can be used to detect a missing pulse or abnormally long spacing between consecutive pulses in a train of pulses. The timing interval of the monostable circuit is re-triggered continuously by the input pulse train as long as the pulse spacing is less than the timing interval. A longer pulse spacing, missing pulse, or terminated pulse train permits the timing interval to be completed, thereby generating an output pulse as shown in Figure 17.

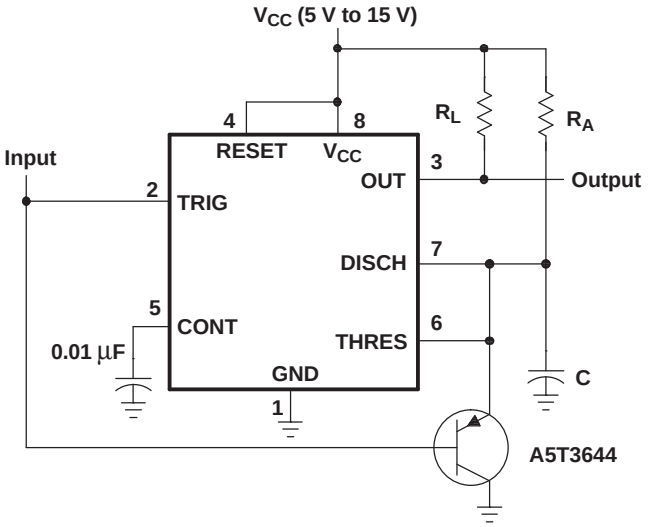

Pin numbers shown are shown for the D, JG, P, PS, and PW packages.

Figure 16. Circuit for Missing-Pulse Detector

9.2.1.1 Design Requirements

Input fault (missing pulses) must be input high. Input stuck low will not be detected because timing capacitor "C" will remain discharged.

9.2.1.2 Detailed Design Procedure

Choose R_A and C so that $R_A \times C$ > [maximum normal input high time]. R_L improves V_{OH}, but it is not required for TTL compatibility.

Typical Applications (continued)

9.2.1.3 Application Curves

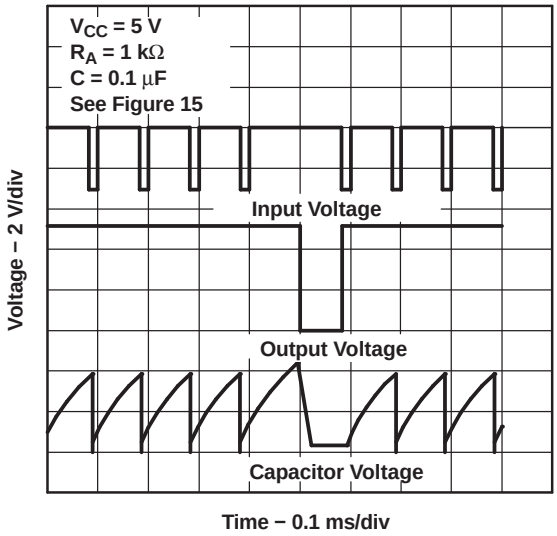

Figure 17. Completed Timing Waveforms for Missing-Pulse Detector

9.2.2 Pulse-Width Modulation

The operation of the timer can be modified by modulating the internal threshold and trigger voltages, which is accomplished by applying an external voltage (or current) to CONT. Figure 18 shows a circuit for pulse-width modulation. A continuous input pulse train triggers the monostable circuit, and a control signal modulates the threshold voltage. Figure 19 shows the resulting output pulse-width modulation. While a sine-wave modulation signal is shown, any wave shape could be used.

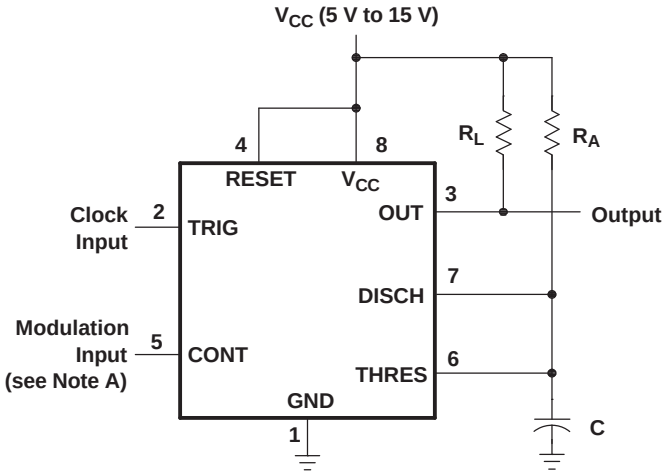

Pin numbers shown are for the D, JG, P, PS, and PW packages.

NOTE A: The modulating signal can be direct or capacitively coupled to CONT. For direct coupling, the effects of modulation source voltage and impedance on the bias of the timer should be considered.

Figure 18. Circuit for Pulse-Width Modulation

Copyright © 1973–2014, Texas Instruments Incorporated

Typical Applications (continued)

9.2.2.1 Design Requirements

Clock input must have V_{OL} and V_{OH} levels that are less than and greater than 1/3 VCC. Modulation input can vary from ground to VCC. The application must be tolerant of a nonlinear transfer function; the relationship between modulation input and pulse width is not linear because the capacitor charge is based RC on an negative exponential curve.

9.2.2.2 Detailed Design Procedure

Choose R_A and C so that $R_A \times C = 1/4$ [clock input period]. R_L improves V_{OH}, but it is not required for TTL compatibility.

9.2.2.3 Application Curves

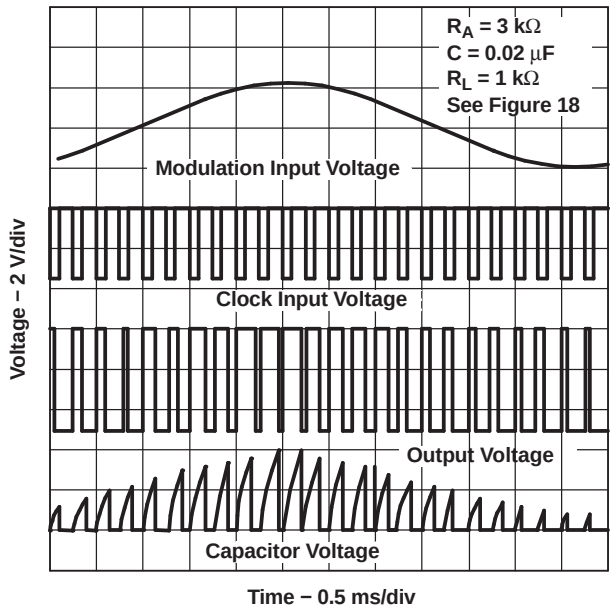

Figure 19. Pulse-Width-Modulation Waveforms

9.2.3 Pulse-Position Modulation

As shown in Figure 20, any of these timers can be used as a pulse-position modulator. This application modulates the threshold voltage and, thereby, the time delay, of a free-running oscillator. Figure 21 shows a triangular-wave modulation signal for such a circuit; however, any wave shape could be used.

Typical Applications (continued)

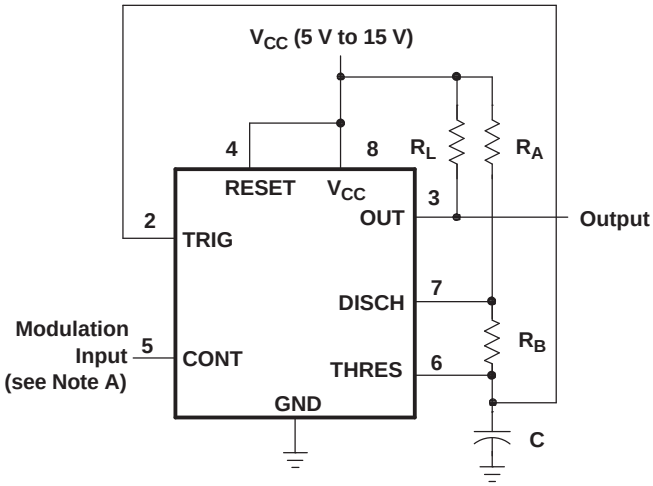

Pin numbers shown are for the D, JG, P, PS, and PW packages.

NOTE A: The modulating signal can be direct or capacitively coupled to CONT. For direct coupling, the effects of modulation source voltage and impedance on the bias of the timer should be considered.

Figure 20. Circuit for Pulse-Position Modulation

9.2.3.1 Design Requirements

Both DC and AC coupled modulation input will change the upper and lower voltage thresholds for the timing capacitor. Both frequency and duty cycle will vary with the modulation voltage.

9.2.3.2 Detailed Design Procedure

The nominal output frequency and duty cycle can be determined using formulas in A-stable Operation section. R_L improves V_{OH}, but it is not required for TTL compatibility.

Copyright © 1973–2014, Texas Instruments Incorporated

Typical Applications (continued)

9.2.3.3 Application Curves

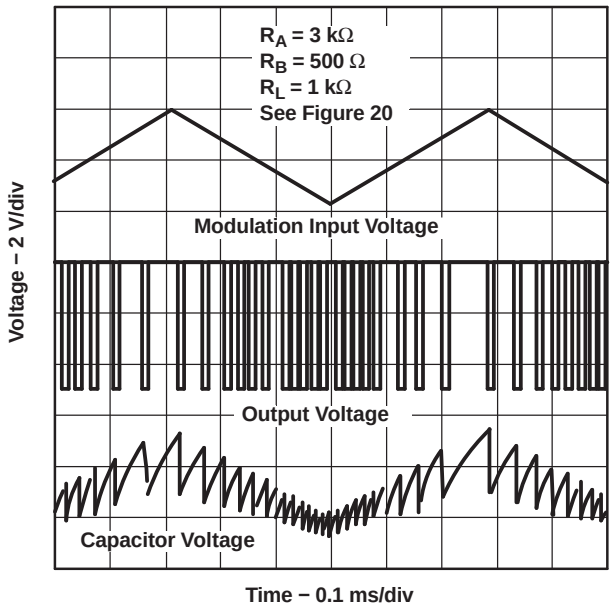

Figure 21. Pulse-Position-Modulation Waveforms

9.2.4 Sequential Timer

Many applications, such as computers, require signals for initializing conditions during start-up. Other applications, such as test equipment, require activation of test signals in sequence. These timing circuits can be connected to provide such sequential control. The timers can be used in various combinations of astable or monostable circuit connections, with or without modulation, for extremely flexible waveform control. Figure 22 shows a sequencer circuit with possible applications in many systems, and Figure 23 shows the output waveforms.

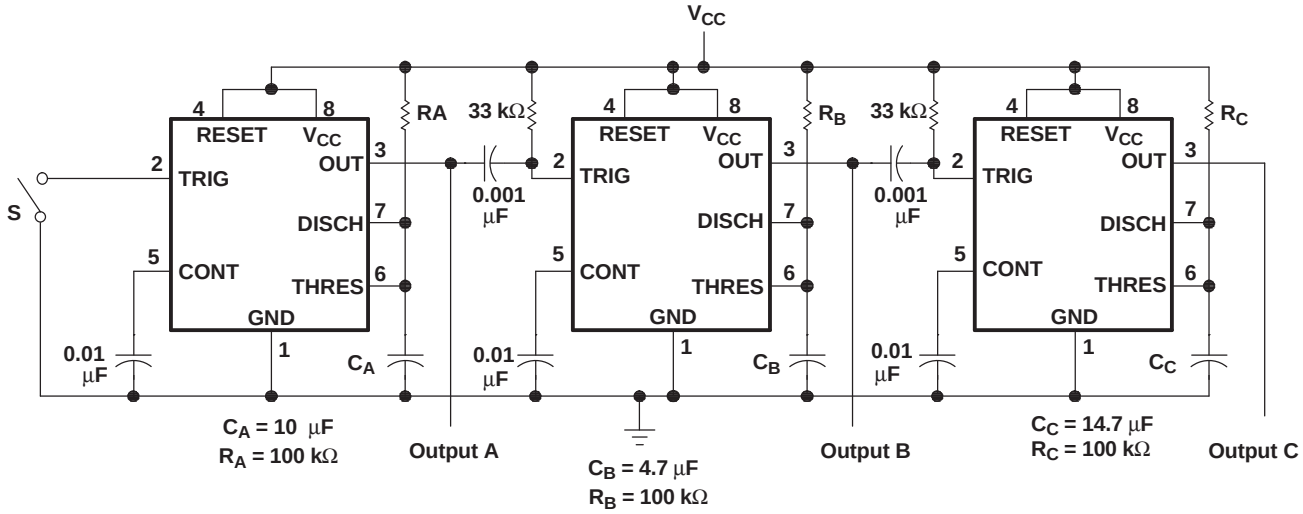

Pin numbers shown are for the D, JG, P, PS, and PW packages.
NOTE A: S closes momentarily at t = 0.

Figure 22. Sequential Timer Circuit

Typical Applications (continued)

9.2.4.1 Design Requirements

The sequential timer application chains together multiple mono-stable timers. The joining components are the 33-kΩ resistors and 0.001-µF capacitors. The output high to low edge passes a 10-µs start pulse to the next monostable.

9.2.4.2 Detailed Design Procedure

The timing resistors and capacitors can be chosen using this formula. $t_w = 1.1 \times R \times C$.

9.2.4.3 Application Curves

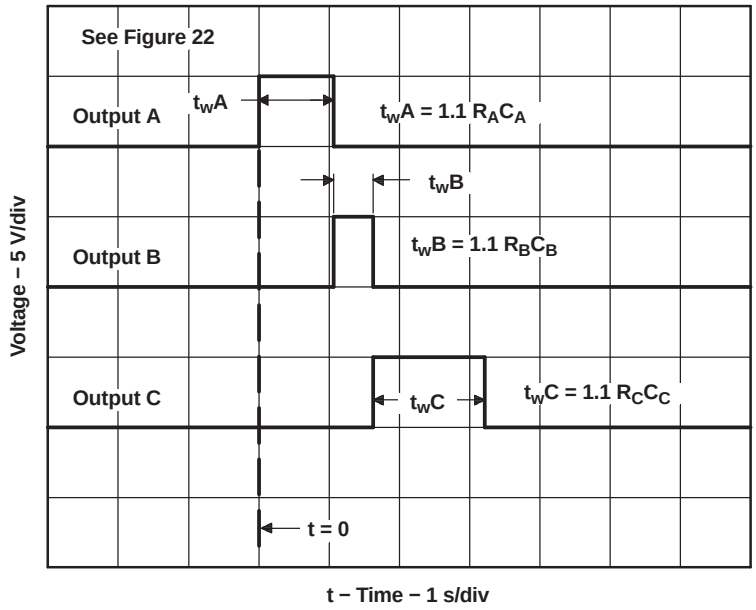

Figure 23. Sequential Timer Waveforms

10 Power Supply Recommendations

The devices are designed to operate from an input voltage supply range between 4.5 V and 16 V. (18 V for SE555). A bypass capacitor is highly recommended from VCC to ground pin; ceramic 0.1 µF capacitor is sufficient.

Copyright © 1973–2014, Texas Instruments Incorporated

11 Device and Documentation Support

11.1 Related Links

The table below lists quick access links. Categories include technical documents, support and community resources, tools and software, and quick access to sample or buy.

Table 2. Related Links

PARTS	PRODUCT FOLDER	SAMPLE & BUY	TECHNICAL DOCUMENTS	TOOLS & SOFTWARE	SUPPORT & COMMUNITY
NA555	Click here	Click here	Click here	Click here	Click here
NE555	Click here	Click here	Click here	Click here	Click here
SA555	Click here	Click here	Click here	Click here	Click here
SE555	Click here	Click here	Click here	Click here	Click here

11.2 Trademarks

All trademarks are the property of their respective owners.

11.3 Electrostatic Discharge Caution

This integrated circuit can be damaged by ESD. Texas Instruments recommends that all integrated circuits be handled with appropriate precautions. Failure to observe proper handling and installation procedures can cause damage.

ESD damage can range from subtle performance degradation to complete device failure. Precision integrated circuits may be more susceptible to damage because very small parametric changes could cause the device not to meet its published specifications.

11.4 Glossary

SLYZ022 — *TI Glossary.*

This glossary lists and explains terms, acronyms and definitions.

12 Mechanical, Packaging, and Orderable Information

The following pages include mechanical packaging and orderable information. This information is the most current data available for the designated devices. This data is subject to change without notice and revision of this document. For browser based versions of this data sheet, refer to the left hand navigation.

PACKAGING INFORMATION

Orderable Device	Status (1)	Package Type	Package Drawing	Pins	Package Qty	Eco Plan (2)	Lead/Ball Finish (6)	MSL Peak Temp (3)	Op Temp (°C)	Device Marking (4/5)	Samples
JM38510/10901BPA	ACTIVE	CDIP	JG	8	1	TBD	A42	N / A for Pkg Type	-55 to 125	JM38510 /10901BPA	Samples
M38510/10901BPA	ACTIVE	CDIP	JG	8	1	TBD	A42	N / A for Pkg Type	-55 to 125	JM38510 /10901BPA	Samples
NA555D	ACTIVE	SOIC	D	8	75	Green (RoHS & no Sb/Br)	CU NIPDAU	Level-1-260C-UNLIM	-40 to 105	NA555	Samples
NA555DG4	ACTIVE	SOIC	D	8	75	Green (RoHS & no Sb/Br)	CU NIPDAU	Level-1-260C-UNLIM	-40 to 105	NA555	Samples
NA555DR	ACTIVE	SOIC	D	8	2500	Green (RoHS & no Sb/Br)	CU NIPDAU	Level-1-260C-UNLIM	-40 to 105	NA555	Samples
NA555DRG4	ACTIVE	SOIC	D	8	2500	Green (RoHS & no Sb/Br)	CU NIPDAU	Level-1-260C-UNLIM	-40 to 105	NA555	Samples
NA555P	ACTIVE	PDIP	P	8	50	Pb-Free (RoHS)	CU NIPDAU | CU SN	N / A for Pkg Type	-40 to 105	NA555P	Samples
NA555PE4	ACTIVE	PDIP	P	8	50	Pb-Free (RoHS)	CU NIPDAU	N / A for Pkg Type	-40 to 105	NA555P	Samples
NE555D	ACTIVE	SOIC	D	8	75	Green (RoHS & no Sb/Br)	CU NIPDAU	Level-1-260C-UNLIM	0 to 70	NE555	Samples
NE555DE4	ACTIVE	SOIC	D	8	75	Green (RoHS & no Sb/Br)	CU NIPDAU	Level-1-260C-UNLIM	0 to 70	NE555	Samples
NE555DG4	ACTIVE	SOIC	D	8	75	Green (RoHS & no Sb/Br)	CU NIPDAU	Level-1-260C-UNLIM	0 to 70	NE555	Samples
NE555DR	ACTIVE	SOIC	D	8	2500	Green (RoHS & no Sb/Br)	CU NIPDAU | CU SN	Level-1-260C-UNLIM	0 to 70	NE555	Samples
NE555DRE4	ACTIVE	SOIC	D	8	2500	Green (RoHS & no Sb/Br)	CU NIPDAU	Level-1-260C-UNLIM	0 to 70	NE555	Samples
NE555DRG3	PREVIEW	SOIC	D	8		TBD	Call TI	Call TI	0 to 70	NE555	
NE555DRG4	ACTIVE	SOIC	D	8	2500	Green (RoHS & no Sb/Br)	CU NIPDAU	Level-1-260C-UNLIM	0 to 70	NE555	Samples
NE555P	ACTIVE	PDIP	P	8	50	Pb-Free (RoHS)	CU NIPDAU | CU SN	N / A for Pkg Type	0 to 70	NE555P	Samples
NE555PE3	PREVIEW	PDIP	P	8		TBD	Call TI	Call TI	0 to 70	NE555P	
NE555PE4	ACTIVE	PDIP	P	8	50	Pb-Free (RoHS)	CU NIPDAU	N / A for Pkg Type	0 to 70	NE555P	Samples

Orderable Device	Status (1)	Package Type	Package Drawing	Pins	Package Qty	Eco Plan (2)	Lead/Ball Finish (6)	MSL Peak Temp (3)	Op Temp (°C)	Device Marking (4/5)	Samples
NE555PSLE	OBSOLETE	SO	PS	8		TBD	Call TI	Call TI	0 to 70		
NE555PSR	ACTIVE	SO	PS	8	2000	Green (RoHS & no Sb/Br)	CU NIPDAU	Level-1-260C-UNLIM	0 to 70	N555	Samples
NE555PSRE4	ACTIVE	SO	PS	8	2000	Green (RoHS & no Sb/Br)	CU NIPDAU	Level-1-260C-UNLIM	0 to 70	N555	Samples
NE555PSRG4	ACTIVE	SO	PS	8	2000	Green (RoHS & no Sb/Br)	CU NIPDAU	Level-1-260C-UNLIM	0 to 70	N555	Samples
NE555PW	ACTIVE	TSSOP	PW	8	150	Green (RoHS & no Sb/Br)	CU NIPDAU	Level-1-260C-UNLIM	0 to 70	N555	Samples
NE555PWE4	ACTIVE	TSSOP	PW	8	150	Green (RoHS & no Sb/Br)	CU NIPDAU	Level-1-260C-UNLIM	0 to 70	N555	Samples
NE555PWG4	ACTIVE	TSSOP	PW	8	150	Green (RoHS & no Sb/Br)	CU NIPDAU	Level-1-260C-UNLIM	0 to 70	N555	Samples
NE555PWR	ACTIVE	TSSOP	PW	8	2000	Green (RoHS & no Sb/Br)	CU NIPDAU	Level-1-260C-UNLIM	0 to 70	N555	Samples
NE555PWRE4	ACTIVE	TSSOP	PW	8	2000	Green (RoHS & no Sb/Br)	CU NIPDAU	Level-1-260C-UNLIM	0 to 70	N555	Samples
NE555PWRG4	ACTIVE	TSSOP	PW	8	2000	Green (RoHS & no Sb/Br)	CU NIPDAU	Level-1-260C-UNLIM	0 to 70	N555	Samples
NE555Y	OBSOLETE			0		TBD	Call TI	Call TI	0 to 70		
SA555D	ACTIVE	SOIC	D	8	75	Green (RoHS & no Sb/Br)	CU NIPDAU	Level-1-260C-UNLIM	-40 to 85	SA555	Samples
SA555DE4	ACTIVE	SOIC	D	8	75	Green (RoHS & no Sb/Br)	CU NIPDAU	Level-1-260C-UNLIM	-40 to 85	SA555	Samples
SA555DG4	ACTIVE	SOIC	D	8	75	Green (RoHS & no Sb/Br)	CU NIPDAU	Level-1-260C-UNLIM	-40 to 85	SA555	Samples
SA555DR	ACTIVE	SOIC	D	8	2500	Green (RoHS & no Sb/Br)	CU NIPDAU | CU SN	Level-1-260C-UNLIM	-40 to 85	SA555	Samples
SA555DRE4	ACTIVE	SOIC	D	8	2500	Green (RoHS & no Sb/Br)	CU NIPDAU	Level-1-260C-UNLIM	-40 to 85	SA555	Samples
SA555DRG4	ACTIVE	SOIC	D	8	2500	Green (RoHS & no Sb/Br)	CU NIPDAU	Level-1-260C-UNLIM	-40 to 85	SA555	Samples
SA555P	ACTIVE	PDIP	P	8	50	Pb-Free (RoHS)	CU NIPDAU	N / A for Pkg Type	-40 to 85	SA555P	Samples
SA555PE4	ACTIVE	PDIP	P	8	50	Pb-Free (RoHS)	CU NIPDAU	N / A for Pkg Type	-40 to 85	SA555P	Samples

Orderable Device	Status (1)	Package Type	Package Drawing	Pins	Package Qty	Eco Plan (2)	Lead/Ball Finish (6)	MSL Peak Temp (3)	Op Temp (°C)	Device Marking (4/5)	Samples
SE555D	ACTIVE	SOIC	D	8	75	Green (RoHS & no Sb/Br)	CU NIPDAU	Level-1-260C-UNLIM	-55 to 125	SE555	Samples
SE555DG4	ACTIVE	SOIC	D	8	75	Green (RoHS & no Sb/Br)	CU NIPDAU	Level-1-260C-UNLIM	-55 to 125	SE555	Samples
SE555DR	ACTIVE	SOIC	D	8	2500	Green (RoHS & no Sb/Br)	CU NIPDAU	Level-1-260C-UNLIM	-55 to 125	SE555	Samples
SE555DRG4	ACTIVE	SOIC	D	8	2500	Green (RoHS & no Sb/Br)	CU NIPDAU	Level-1-260C-UNLIM	-55 to 125	SE555	Samples
SE555FKB	ACTIVE	LCCC	FK	20	1	TBD	POST-PLATE	N / A for Pkg Type	-55 to 125	SE555FKB	Samples
SE555JG	ACTIVE	CDIP	JG	8	1	TBD	A42	N / A for Pkg Type	-55 to 125	SE555JG	Samples
SE555JGB	ACTIVE	CDIP	JG	8	1	TBD	A42	N / A for Pkg Type	-55 to 125	SE555JGB	Samples
SE555N	OBSOLETE	PDIP	N	8		TBD	Call TI	Call TI	-55 to 125		
SE555P	ACTIVE	PDIP	P	8	50	Pb-Free (RoHS)	CU NIPDAU	N / A for Pkg Type	-55 to 125	SE555P	Samples

(1) The marketing status values are defined as follows:
ACTIVE: Product device recommended for new designs.
LIFEBUY: TI has announced that the device will be discontinued, and a lifetime-buy period is in effect.
NRND: Not recommended for new designs. Device is in production to support existing customers, but TI does not recommend using this part in a new design.
PREVIEW: Device has been announced but is not in production. Samples may or may not be available.
OBSOLETE: TI has discontinued the production of the device.

(2) Eco Plan - The planned eco-friendly classification: Pb-Free (RoHS), Pb-Free (RoHS Exempt), or Green (RoHS & no Sb/Br) - please check http://www.ti.com/productcontent for the latest availability information and additional product content details.
TBD: The Pb-Free/Green conversion plan has not been defined.
Pb-Free (RoHS): TI's terms "Lead-Free" or "Pb-Free" mean semiconductor products that are compatible with the current RoHS requirements for all 6 substances, including the requirement that lead not exceed 0.1% by weight in homogeneous materials. Where designed to be soldered at high temperatures, TI Pb-Free products are suitable for use in specified lead-free processes.
Pb-Free (RoHS Exempt): This component has a RoHS exemption for either 1) lead-based flip-chip solder bumps used between the die and package, or 2) lead-based die adhesive used between the die and leadframe. The component is otherwise considered Pb-Free (RoHS compatible) as defined above.
Green (RoHS & no Sb/Br): TI defines "Green" to mean Pb-Free (RoHS compatible), and free of Bromine (Br) and Antimony (Sb) based flame retardants (Br or Sb do not exceed 0.1% by weight in homogeneous material)

(3) MSL, Peak Temp. - The Moisture Sensitivity Level rating according to the JEDEC industry standard classifications, and peak solder temperature.

(4) There may be additional marking, which relates to the logo, the lot trace code information, or the environmental category on the device.

(5) Multiple Device Markings will be inside parentheses. Only one Device Marking contained in parentheses and separated by a "~" will appear on a device. If a line is indented then it is a continuation of the previous line and the two combined represent the entire Device Marking for that device.

(6) Lead/Ball Finish - Orderable Devices may have multiple material finish options. Finish options are separated by a vertical ruled line. Lead/Ball Finish values may wrap to two lines if the finish value exceeds the maximum column width.

Important Information and Disclaimer: The information provided on this page represents TI's knowledge and belief as of the date that it is provided. TI bases its knowledge and belief on information provided by third parties, and makes no representation or warranty as to the accuracy of such information. Efforts are underway to better integrate information from third parties. TI has taken and continues to take reasonable steps to provide representative and accurate information but may not have conducted destructive testing or chemical analysis on incoming materials and chemicals. TI and TI suppliers consider certain information to be proprietary, and thus CAS numbers and other limited information may not be available for release.

In no event shall TI's liability arising out of such information exceed the total purchase price of the TI part(s) at issue in this document sold by TI to Customer on an annual basis.

OTHER QUALIFIED VERSIONS OF SE555, SE555M :

- Catalog: SE555
- Military: SE555M
- Space: SE555-SP, SE555-SP

NOTE: Qualified Version Definitions:

- Catalog - TI's standard catalog product
- Military - QML certified for Military and Defense Applications
- Space - Radiation tolerant, ceramic packaging and qualified for use in Space-based application

TAPE AND REEL INFORMATION

REEL DIMENSIONS

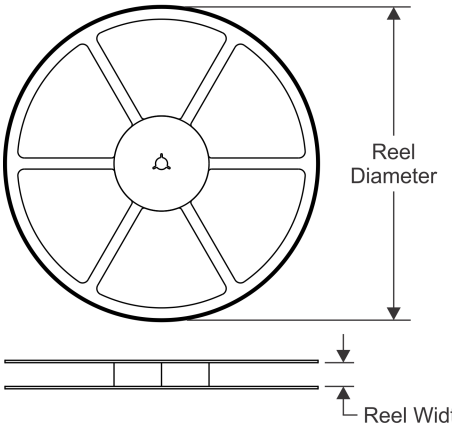

TAPE DIMENSIONS

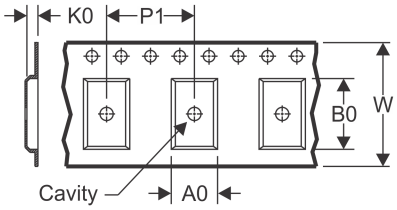

A0	Dimension designed to accommodate the component width
B0	Dimension designed to accommodate the component length
K0	Dimension designed to accommodate the component thickness
W	Overall width of the carrier tape
P1	Pitch between successive cavity centers

QUADRANT ASSIGNMENTS FOR PIN 1 ORIENTATION IN TAPE

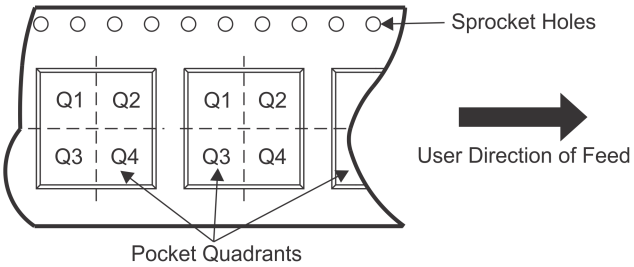

*All dimensions are nominal

Device	Package Type	Package Drawing	Pins	SPQ	Reel Diameter (mm)	Reel Width W1 (mm)	A0 (mm)	B0 (mm)	K0 (mm)	P1 (mm)	W (mm)	Pin1 Quadrant
NA555DR	SOIC	D	8	2500	330.0	12.4	6.4	5.2	2.1	8.0	12.0	Q1
NA555DR	SOIC	D	8	2500	330.0	12.4	6.4	5.2	2.1	8.0	12.0	Q1
NE555DR	SOIC	D	8	2500	330.0	12.4	6.4	5.2	2.1	8.0	12.0	Q1
NE555DR	SOIC	D	8	2500	330.0	12.4	6.4	5.2	2.1	8.0	12.0	Q1
NE555DR	SOIC	D	8	2500	330.0	12.8	6.4	5.2	2.1	8.0	12.0	Q1
NE555DRG4	SOIC	D	8	2500	330.0	12.4	6.4	5.2	2.1	8.0	12.0	Q1
NE555DRG4	SOIC	D	8	2500	330.0	12.4	6.4	5.2	2.1	8.0	12.0	Q1
NE555PSR	SO	PS	8	2000	330.0	16.4	8.2	6.6	2.5	12.0	16.0	Q1
NE555PWR	TSSOP	PW	8	2000	330.0	12.4	7.0	3.6	1.6	8.0	12.0	Q1
SA555DR	SOIC	D	8	2500	330.0	12.4	6.4	5.2	2.1	8.0	12.0	Q1
SA555DRG4	SOIC	D	8	2500	330.0	12.4	6.4	5.2	2.1	8.0	12.0	Q1
SE555DR	SOIC	D	8	2500	330.0	12.4	6.4	5.2	2.1	8.0	12.0	Q1
SE555DRG4	SOIC	D	8	2500	330.0	12.4	6.4	5.2	2.1	8.0	12.0	Q1

TAPE AND REEL BOX DIMENSIONS

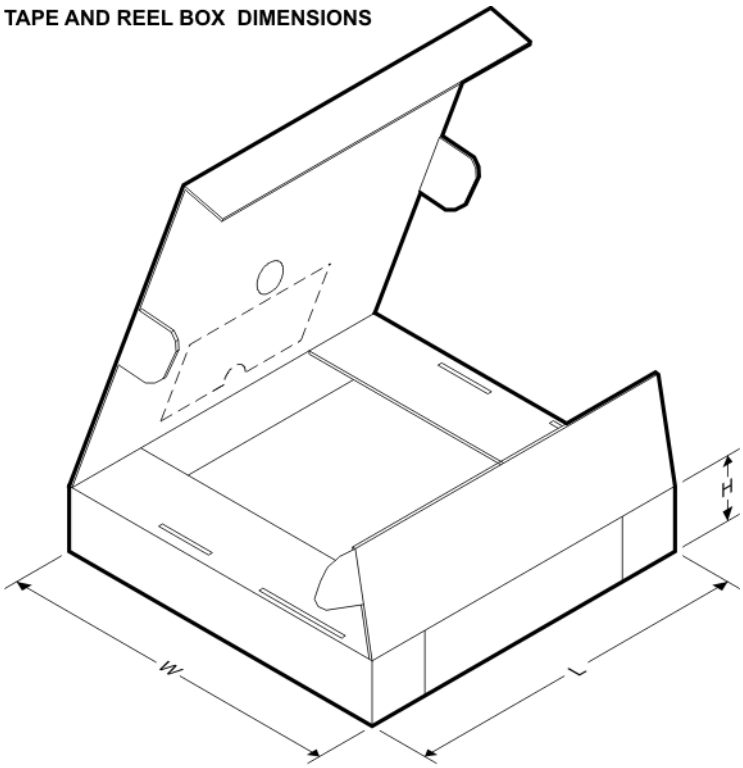

*All dimensions are nominal

Device	Package Type	Package Drawing	Pins	SPQ	Length (mm)	Width (mm)	Height (mm)
NA555DR	SOIC	D	8	2500	340.5	338.1	20.6
NA555DR	SOIC	D	8	2500	367.0	367.0	35.0
NE555DR	SOIC	D	8	2500	340.5	338.1	20.6
NE555DR	SOIC	D	8	2500	367.0	367.0	35.0
NE555DR	SOIC	D	8	2500	364.0	364.0	27.0
NE555DRG4	SOIC	D	8	2500	340.5	338.1	20.6
NE555DRG4	SOIC	D	8	2500	367.0	367.0	35.0
NE555PSR	SO	PS	8	2000	367.0	367.0	38.0
NE555PWR	TSSOP	PW	8	2000	367.0	367.0	35.0
SA555DR	SOIC	D	8	2500	340.5	338.1	20.6
SA555DRG4	SOIC	D	8	2500	340.5	338.1	20.6
SE555DR	SOIC	D	8	2500	367.0	367.0	38.0
SE555DRG4	SOIC	D	8	2500	367.0	367.0	38.0

JG (R-GDIP-T8) **CERAMIC DUAL-IN-LINE**

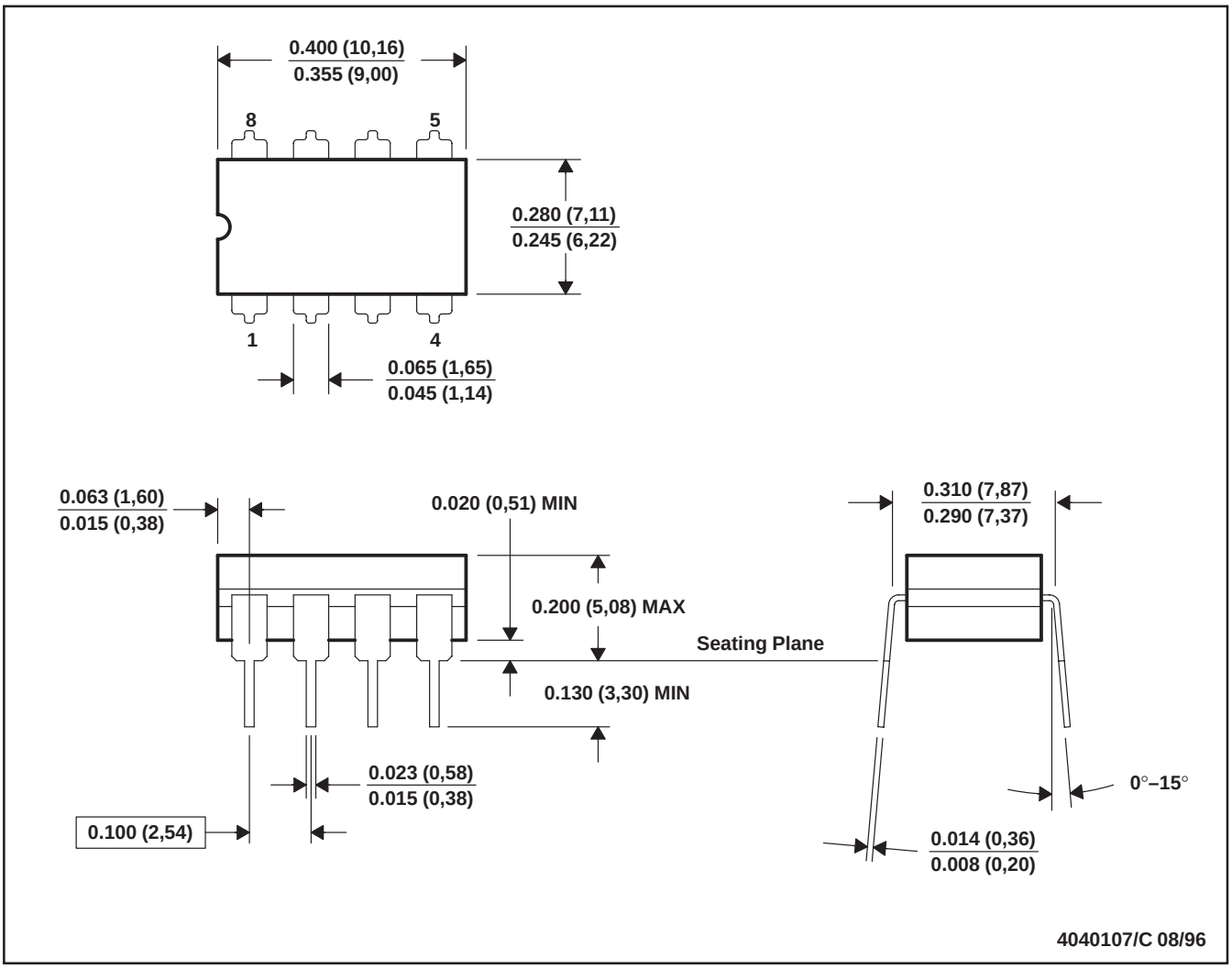

NOTES: A. All linear dimensions are in inches (millimeters).
B. This drawing is subject to change without notice.
C. This package can be hermetically sealed with a ceramic lid using glass frit.
D. Index point is provided on cap for terminal identification.
E. Falls within MIL STD 1835 GDIP1-T8

FK (S–CQCC–N**) LEADLESS CERAMIC CHIP CARRIER

28 TERMINAL SHOWN

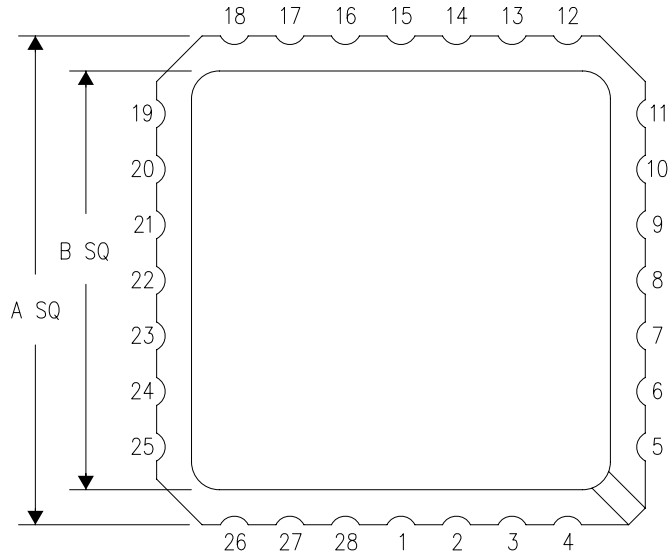

NO. OF TERMINALS **	A		B	
	MIN	MAX	MIN	MAX
20	0.342 (8,69)	0.358 (9,09)	0.307 (7,80)	0.358 (9,09)
28	0.442 (11,23)	0.458 (11,63)	0.406 (10,31)	0.458 (11,63)
44	0.640 (16,26)	0.660 (16,76)	0.495 (12,58)	0.560 (14,22)
52	0.740 (18,78)	0.761 (19,32)	0.495 (12,58)	0.560 (14,22)
68	0.938 (23,83)	0.962 (24,43)	0.850 (21,6)	0.858 (21,8)
84	1.141 (28,99)	1.165 (29,59)	1.047 (26,6)	1.063 (27,0)

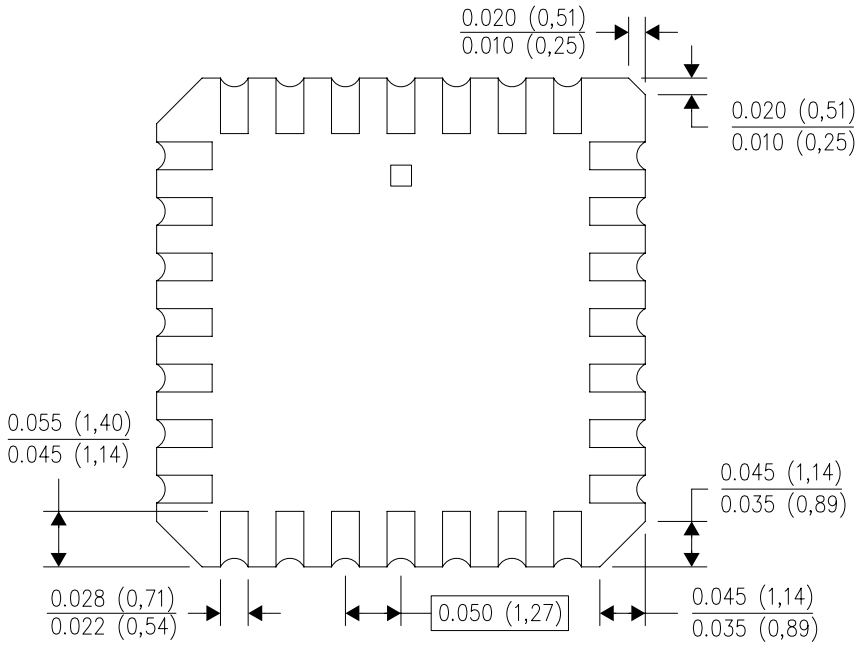

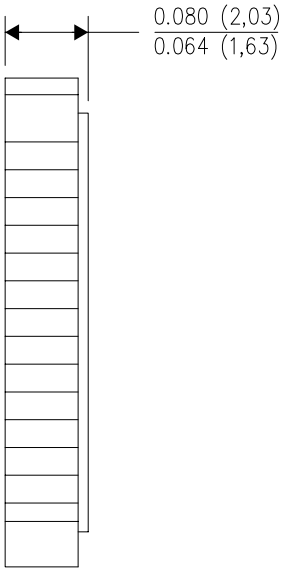

4040140/D 01/11

NOTES:
A. All linear dimensions are in inches (millimeters).
B. This drawing is subject to change without notice.
C. This package can be hermetically sealed with a metal lid.
D. Falls within JEDEC MS–004

P (R–PDIP–T8) PLASTIC DUAL–IN–LINE PACKAGE

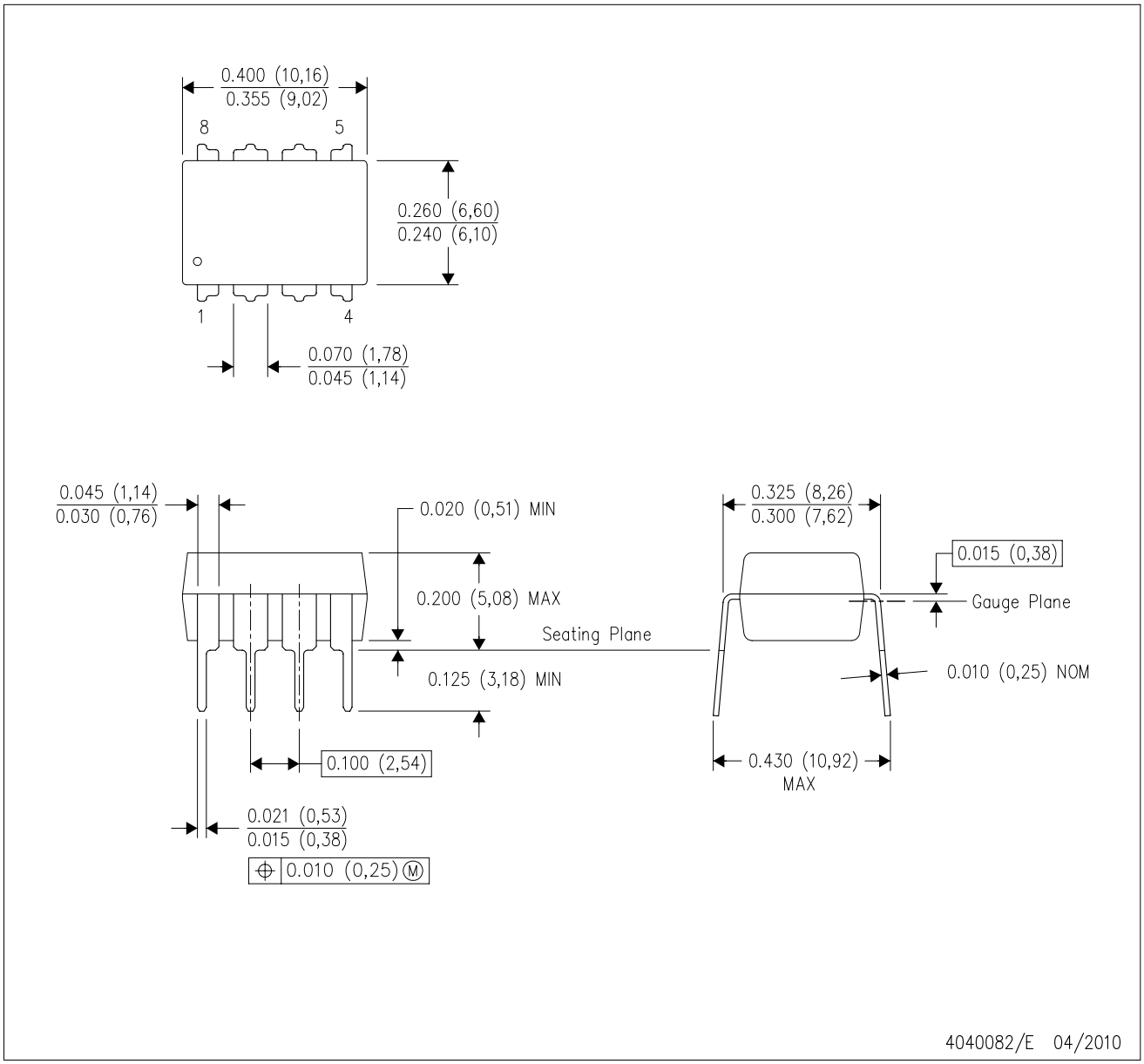

NOTES:
A. All linear dimensions are in inches (millimeters).
B. This drawing is subject to change without notice.
C. Falls within JEDEC MS–001 variation BA.

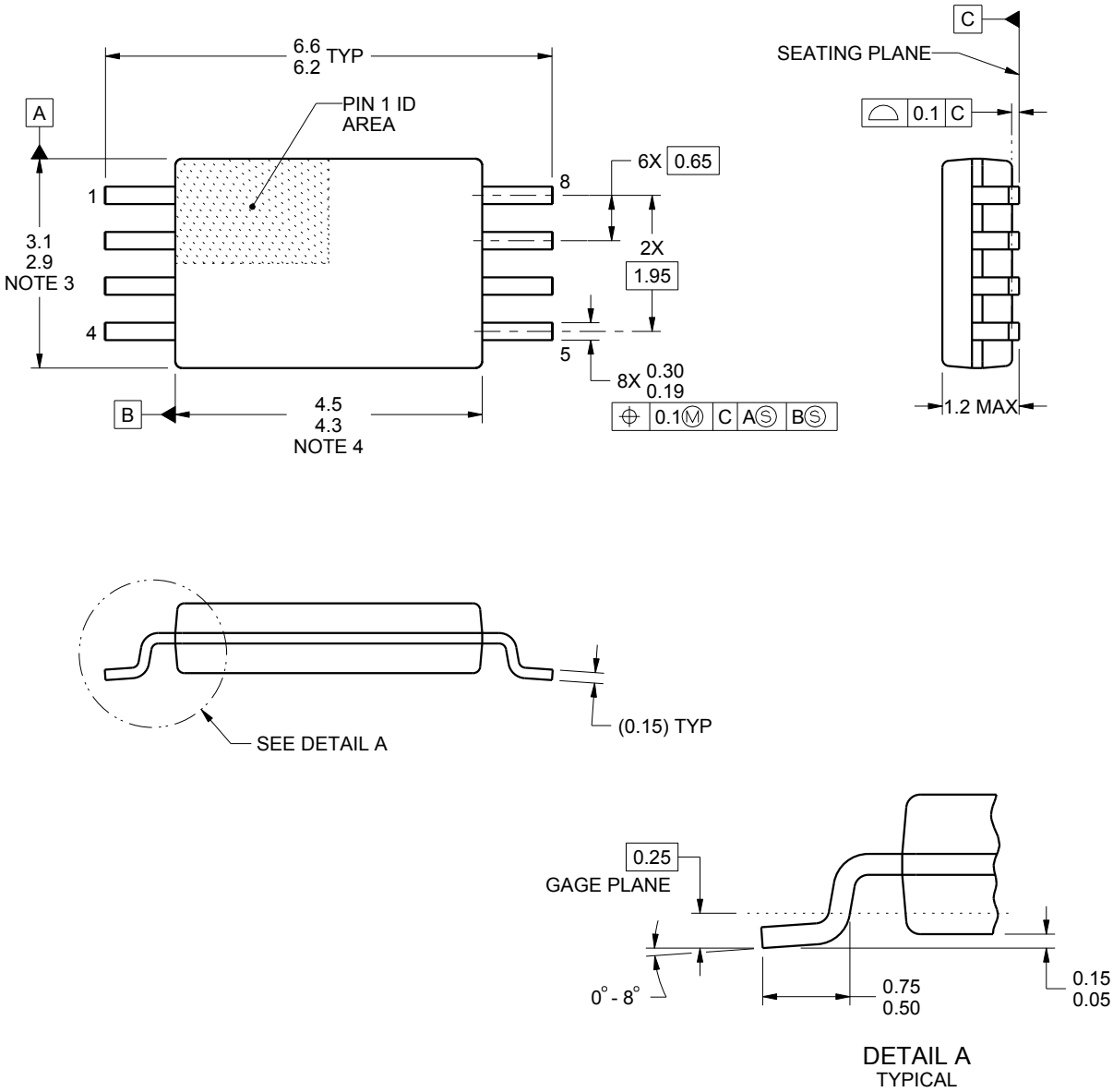

NOTES:

1. All linear dimensions are in millimeters. Any dimensions in parenthesis are for reference only. Dimensioning and tolerancing per ASME Y14.5M.
2. This drawing is subject to change without notice.
3. This dimension does not include mold flash, protrusions, or gate burrs. Mold flash, protrusions, or gate burrs shall not exceed 0.15 mm per side.
4. This dimension does not include interlead flash. Interlead flash shall not exceed 0.25 mm per side.
5. Reference JEDEC registration MO-153, variation AA.

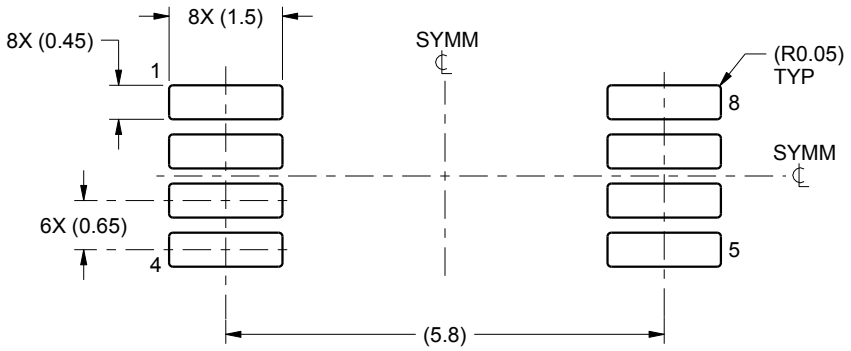

LAND PATTERN EXAMPLE
SCALE:10X

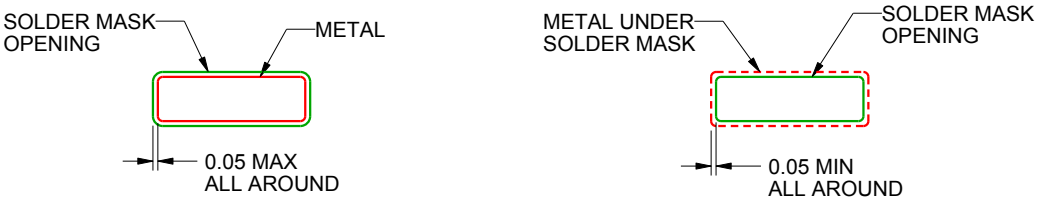

NON SOLDER MASK
DEFINED

SOLDER MASK
DEFINED

SOLDER MASK DETAILS
NOT TO SCALE

4221848/A 02/2015

NOTES: (continued)

6. Publication IPC-7351 may have alternate designs.
7. Solder mask tolerances between and around signal pads can vary based on board fabrication site.

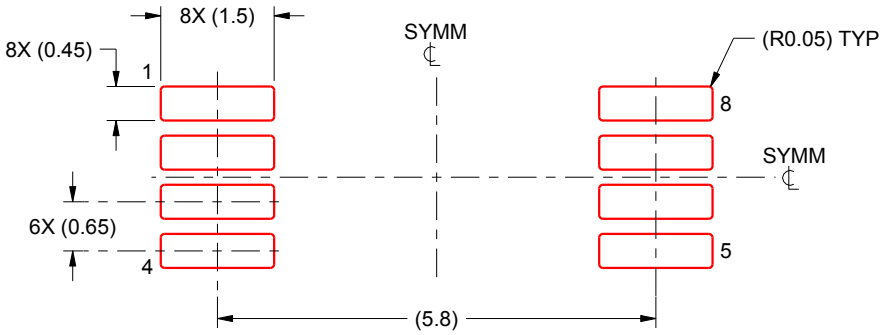

SOLDER PASTE EXAMPLE
BASED ON 0.125 mm THICK STENCIL
SCALE:10X

4221848/A 02/2015

NOTES: (continued)

8. Laser cutting apertures with trapezoidal walls and rounded corners may offer better paste release. IPC-7525 may have alternate design recommendations.
9. Board assembly site may have different recommendations for stencil design.

D (R–PDSO–G8) PLASTIC SMALL OUTLINE

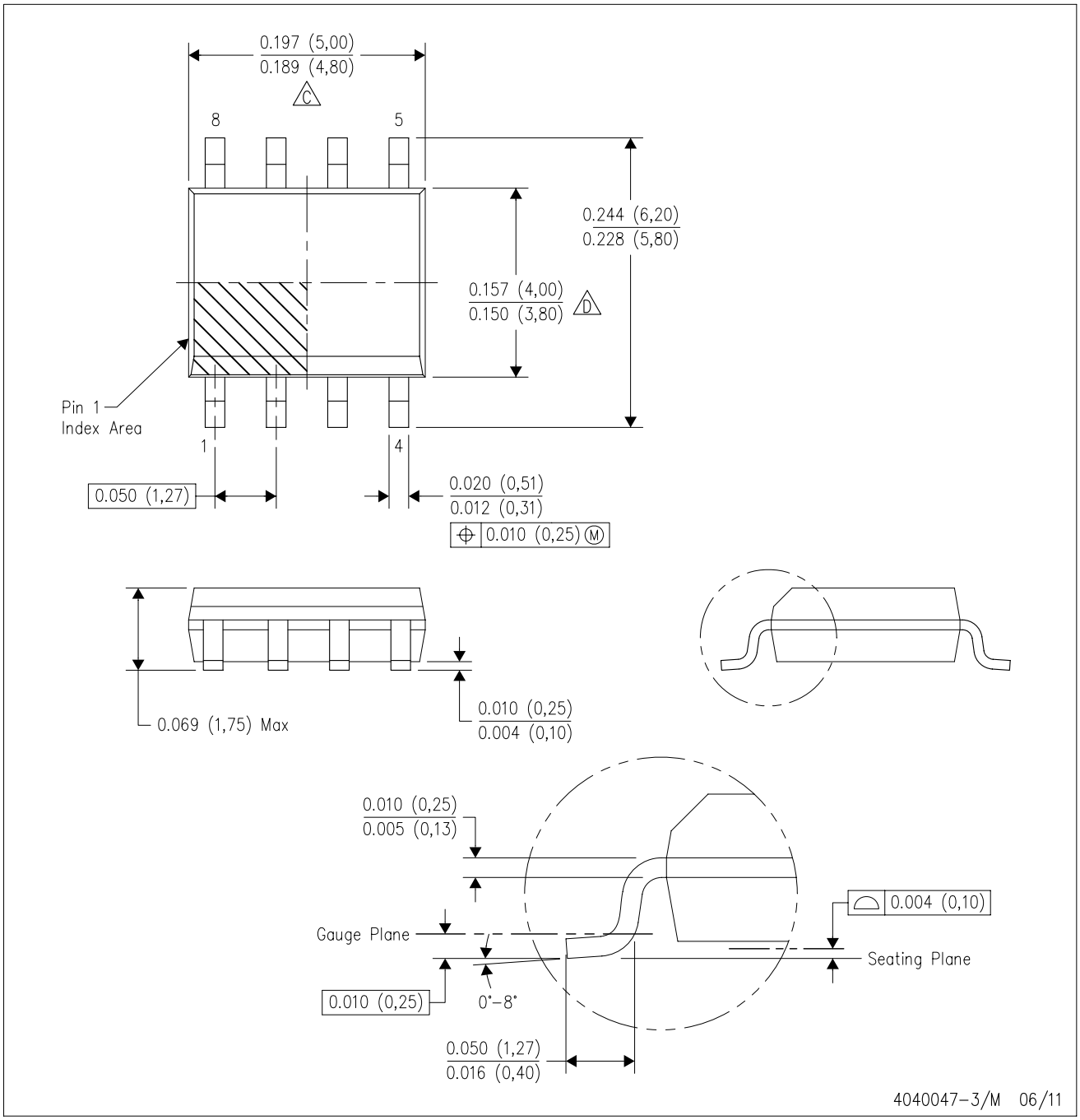

NOTES:
A. All linear dimensions are in inches (millimeters).
B. This drawing is subject to change without notice.
C. Body length does not include mold flash, protrusions, or gate burrs. Mold flash, protrusions, or gate burrs shall not exceed 0.006 (0,15) each side.
D. Body width does not include interlead flash. Interlead flash shall not exceed 0.017 (0,43) each side.
E. Reference JEDEC MS–012 variation AA.

D (R–PDSO–G8) PLASTIC SMALL OUTLINE

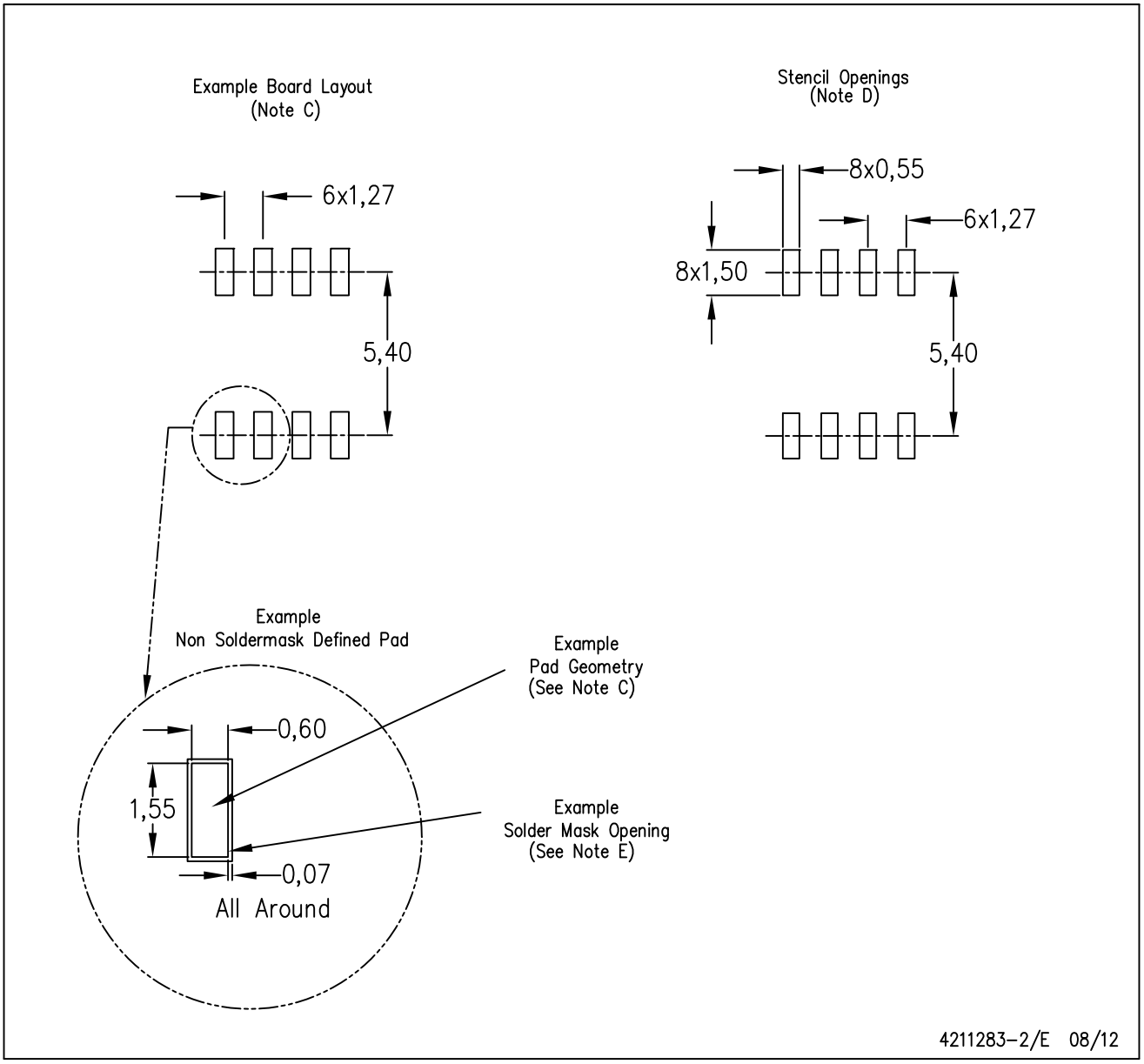

NOTES:
A. All linear dimensions are in millimeters.
B. This drawing is subject to change without notice.
C. Publication IPC–7351 is recommended for alternate designs.
D. Laser cutting apertures with trapezoidal walls and also rounding corners will offer better paste release. Customers should contact their board assembly site for stencil design recommendations. Refer to IPC–7525 for other stencil recommendations.
E. Customers should contact their board fabrication site for solder mask tolerances between and around signal pads.

MECHANICAL DATA

PS (R-PDSO-G8) **PLASTIC SMALL-OUTLINE PACKAGE**

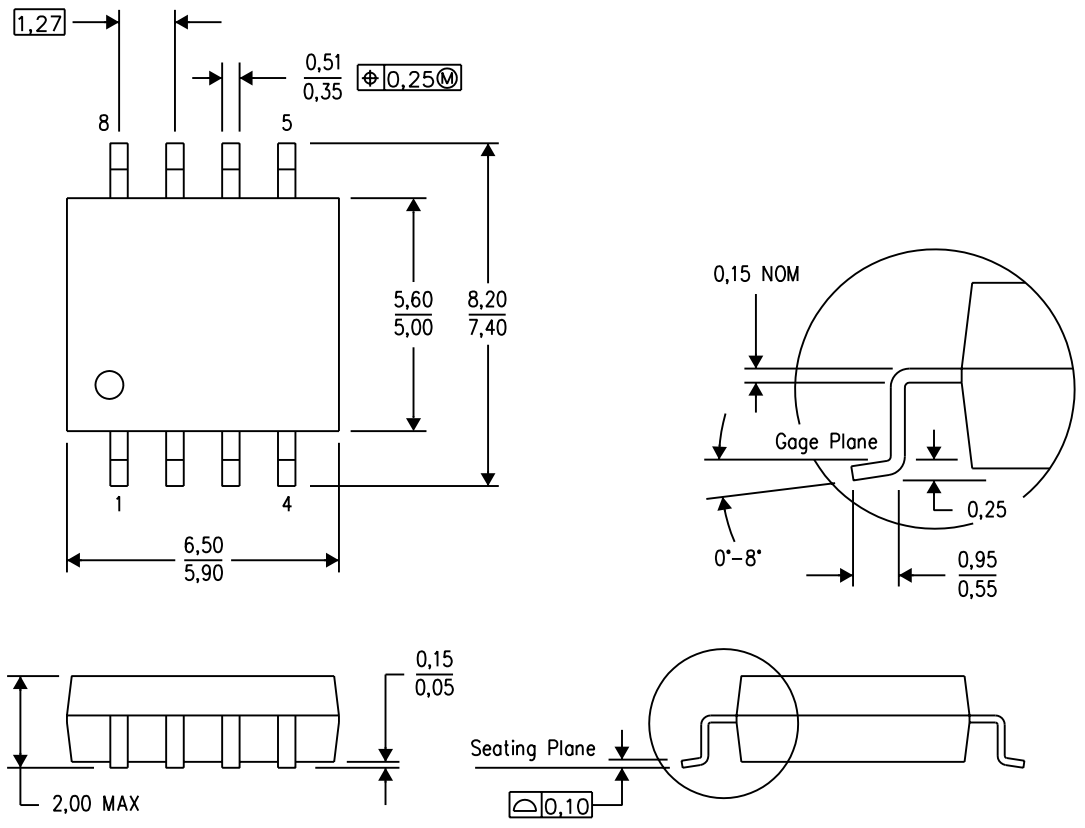

NOTES:
A. All linear dimensions are in millimeters.
B. This drawing is subject to change without notice.
C. Body dimensions do not include mold flash or protrusion, not to exceed 0,15.

PS (R-PDSO-G8) PLASTIC SMALL OUTLINE

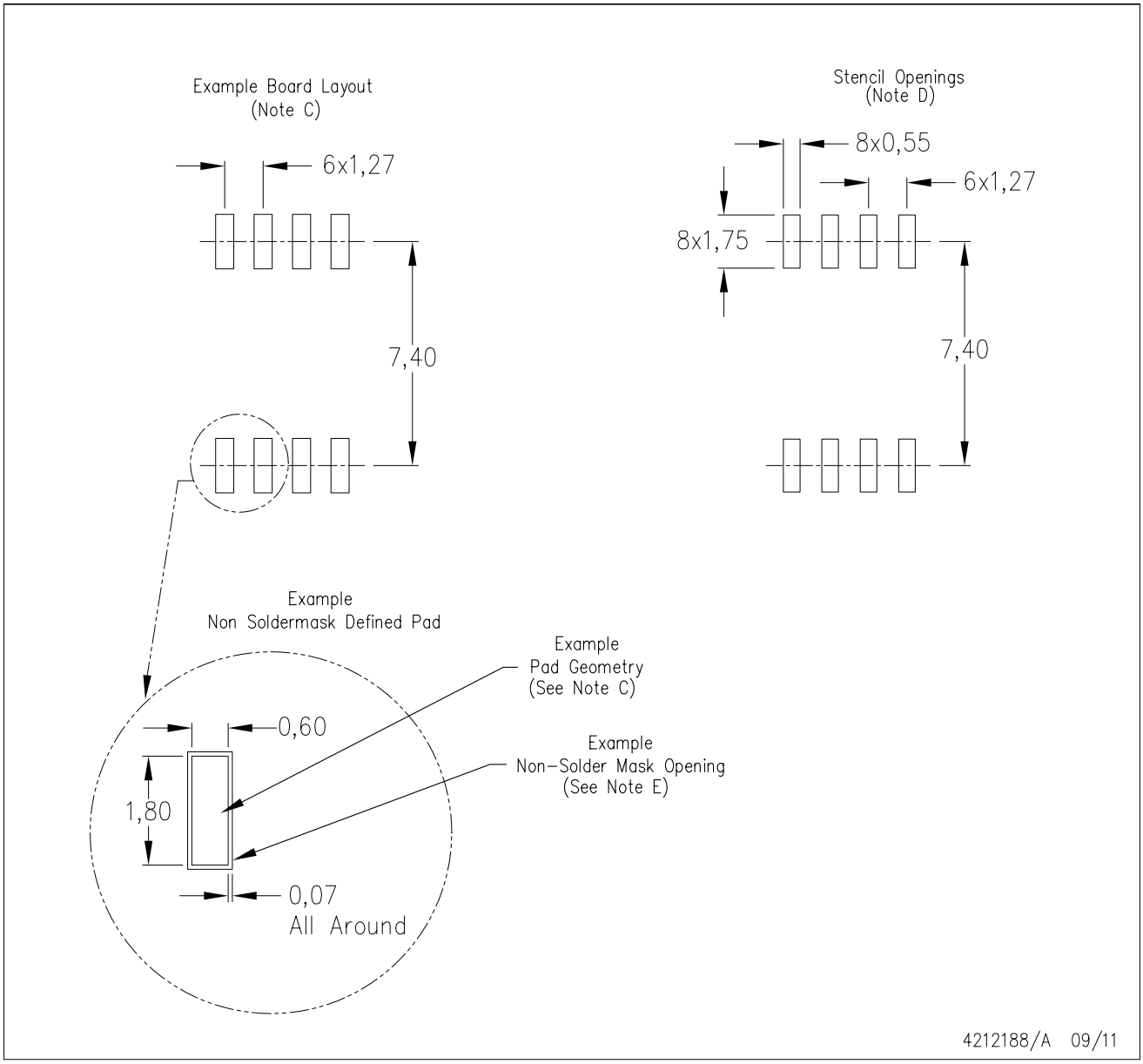

NOTES:
A. All linear dimensions are in millimeters.
B. This drawing is subject to change without notice.
C. Publication IPC-7351 is recommended for alternate designs.
D. Laser cutting apertures with trapezoidal walls and also rounding corners will offer better paste release. Customers should contact their board assembly site for stencil design recommendations. Refer to IPC-7525 for other stencil recommendations.
E. Customers should contact their board fabrication site for solder mask tolerances between and around signal pads.

IMPORTANT NOTICE

Texas Instruments Incorporated and its subsidiaries (TI) reserve the right to make corrections, enhancements, improvements and other changes to its semiconductor products and services per JESD46, latest issue, and to discontinue any product or service per JESD48, latest issue. Buyers should obtain the latest relevant information before placing orders and should verify that such information is current and complete. All semiconductor products (also referred to herein as “components”) are sold subject to TI’s terms and conditions of sale supplied at the time of order acknowledgment.

TI warrants performance of its components to the specifications applicable at the time of sale, in accordance with the warranty in TI’s terms and conditions of sale of semiconductor products. Testing and other quality control techniques are used to the extent TI deems necessary to support this warranty. Except where mandated by applicable law, testing of all parameters of each component is not necessarily performed.

TI assumes no liability for applications assistance or the design of Buyers’ products. Buyers are responsible for their products and applications using TI components. To minimize the risks associated with Buyers’ products and applications, Buyers should provide adequate design and operating safeguards.

TI does not warrant or represent that any license, either express or implied, is granted under any patent right, copyright, mask work right, or other intellectual property right relating to any combination, machine, or process in which TI components or services are used. Information published by TI regarding third-party products or services does not constitute a license to use such products or services or a warranty or endorsement thereof. Use of such information may require a license from a third party under the patents or other intellectual property of the third party, or a license from TI under the patents or other intellectual property of TI.

Reproduction of significant portions of TI information in TI data books or data sheets is permissible only if reproduction is without alteration and is accompanied by all associated warranties, conditions, limitations, and notices. TI is not responsible or liable for such altered documentation. Information of third parties may be subject to additional restrictions.

Resale of TI components or services with statements different from or beyond the parameters stated by TI for that component or service voids all express and any implied warranties for the associated TI component or service and is an unfair and deceptive business practice. TI is not responsible or liable for any such statements.

Buyer acknowledges and agrees that it is solely responsible for compliance with all legal, regulatory and safety-related requirements concerning its products, and any use of TI components in its applications, notwithstanding any applications-related information or support that may be provided by TI. Buyer represents and agrees that it has all the necessary expertise to create and implement safeguards which anticipate dangerous consequences of failures, monitor failures and their consequences, lessen the likelihood of failures that might cause harm and take appropriate remedial actions. Buyer will fully indemnify TI and its representatives against any damages arising out of the use of any TI components in safety-critical applications.

In some cases, TI components may be promoted specifically to facilitate safety-related applications. With such components, TI’s goal is to help enable customers to design and create their own end-product solutions that meet applicable functional safety standards and requirements. Nonetheless, such components are subject to these terms.

No TI components are authorized for use in FDA Class III (or similar life-critical medical equipment) unless authorized officers of the parties have executed a special agreement specifically governing such use.

Only those TI components which TI has specifically designated as military grade or “enhanced plastic” are designed and intended for use in military/aerospace applications or environments. Buyer acknowledges and agrees that any military or aerospace use of TI components which have ***not*** been so designated is solely at the Buyer's risk, and that Buyer is solely responsible for compliance with all legal and regulatory requirements in connection with such use.

TI has specifically designated certain components as meeting ISO/TS16949 requirements, mainly for automotive use. In any case of use of non-designated products, TI will not be responsible for any failure to meet ISO/TS16949.

Products		**Applications**	
Audio	www.ti.com/audio	Automotive and Transportation	www.ti.com/automotive
Amplifiers	amplifier.ti.com	Communications and Telecom	www.ti.com/communications
Data Converters	dataconverter.ti.com	Computers and Peripherals	www.ti.com/computers
DLP® Products	www.dlp.com	Consumer Electronics	www.ti.com/consumer-apps
DSP	dsp.ti.com	Energy and Lighting	www.ti.com/energy
Clocks and Timers	www.ti.com/clocks	Industrial	www.ti.com/industrial
Interface	interface.ti.com	Medical	www.ti.com/medical
Logic	logic.ti.com	Security	www.ti.com/security
Power Mgmt	power.ti.com	Space, Avionics and Defense	www.ti.com/space-avionics-defense
Microcontrollers	microcontroller.ti.com	Video and Imaging	www.ti.com/video
RFID	www.ti-rfid.com		
OMAP Applications Processors	www.ti.com/omap	**TI E2E Community**	e2e.ti.com
Wireless Connectivity	www.ti.com/wirelessconnectivity		

Mailing Address: Texas Instruments, Post Office Box 655303, Dallas, Texas 75265
Copyright © 2016, Texas Instruments Incorporated