LMx35, LMx35A Precision Temperature Sensors

1 Features

- Directly Calibrated to the Kelvin Temperature Scale
- 1°C Initial Accuracy Available
- Operates from 400 µA to 5 mA
- Less than 1-Ω Dynamic Impedance
- Easily Calibrated
- Wide Operating Temperature Range
- 200°C Overrange
- Low Cost

2 Applications

- Power Supplies
- Battery Management
- HVAC
- Appliances

3 Description

The LM135 series are precision, easily-calibrated, integrated circuit temperature sensors. Operating as a 2-terminal zener, the LM135 has a breakdown voltage directly proportional to absolute temperature at 10 mV/°K. With less than 1-Ω dynamic impedance, the device operates over a current range of 400 µA to 5 mA with virtually no change in performance. When calibrated at 25°C, the LM135 has typically less than 1°C error over a 100°C temperature range. Unlike other sensors, the LM135 has a linear output.

Applications for the LM135 include almost any type of temperature sensing over a −55°C to 150°C temperature range. The low impedance and linear output make interfacing to readout or control circuitry are especially easy.

The LM135 operates over a −55°C to 150°C temperature range while the LM235 operates over a −40°C to 125°C temperature range. The LM335 operates from −40°C to 100°C. The LMx35 devices are available packaged in hermetic TO transistor packages while the LM335 is also available in plastic TO-92 packages.

Device Information(1)

PART NUMBER	PACKAGE	BODY SIZE (NOM)
LM135	TO-46 (3)	4.699 mm × 4.699 mm
LM135A		
LM235	TO-92 (3)	4.30 mm × 4.30 mm
LM235A		
LM335	SOIC (8)	4.90 mm × 3.91 mm
LM335A		

(1) For all available packages, see the orderable addendum at the end of the datasheet.

Basic Temperature Sensor Simplified Schematic

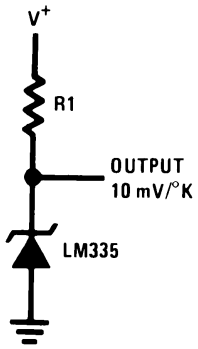

Calibrated Sensor

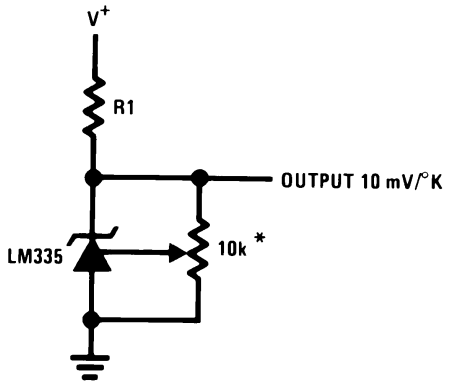

An IMPORTANT NOTICE at the end of this data sheet addresses availability, warranty, changes, use in safety-critical applications, intellectual property matters and other important disclaimers. PRODUCTION DATA.

Table of Contents

1 Features ... 1
2 Applications ... 1
3 Description ... 1
4 Revision History ... 2
5 Pin Configuration and Functions ... 3
6 Specifications ... 4
6.1 Absolute Maximum Ratings ... 4
6.2 Recommended Operating Conditions ... 4
6.3 Thermal Information ... 4
6.4 Temperature Accuracy: LM135/LM235, LM135A/LM235A ... 4
6.5 Temperature Accuracy: LM335, LM335A(1) ... 5
6.6 Electrical Characteristics ... 5
6.7 Typical Characteristics ... 6
7 Detailed Description ... 8
7.1 Overview ... 8
7.2 Functional Block Diagram ... 8
7.3 Feature Description ... 8
7.4 Device Functional Modes ... 9
8 Application and Implementation ... 10
8.1 Application Information ... 10
8.2 Typical Application ... 10
8.3 System Examples ... 11
9 Power Supply Recommendations ... 16
10 Layout ... 16
10.1 Layout Guidelines ... 16
10.2 Layout Example ... 16
10.3 Waterproofing Sensors ... 17
10.4 Mounting the Sensor at the End of a Cable ... 17
11 Device and Documentation Support ... 18
11.1 Device Support ... 18
11.2 Related Links ... 18
11.3 Trademarks ... 18
11.4 Electrostatic Discharge Caution ... 18
11.5 Glossary ... 18
12 Mechanical, Packaging, and Orderable Information ... 18

4 Revision History

NOTE: Page numbers for previous revisions may differ from page numbers in the current version.

Changes from Revision D (March 2013) to Revision E	Page
• Added *Pin Configuration and Functions* section, *Feature Description* section, *Device Functional Modes*, *Application and Implementation* section, *Power Supply Recommendations* section, *Layout* section, *Device and Documentation Support* section, and *Mechanical, Packaging, and Orderable Information* section	1

Changes from Revision C (November 2012) to Revision D	Page
• Changed layout of National Data Sheet to TI format	18

Copyright © 1999–2015, Texas Instruments Incorporated

5 Pin Configuration and Functions

TO-46 (NDV)
3 Pins
Bottom View

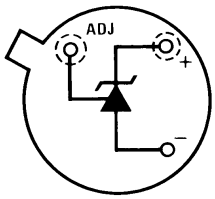

TO-92 (LP)
3 Pins
Bottom View

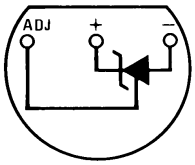

SOIC (D)
8 Pins
Top View

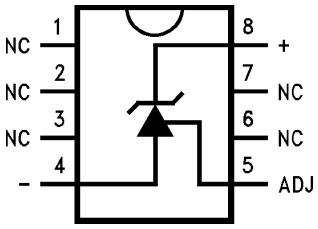

Pin Functions

PIN				I/O	DESCRIPTION
NAME	TO-46	TO-92	SO8		
N.C.	—	—	1	—	No Connection
	—	—	2		
	—	—	3		
–	—	—	4	O	Negative output
ADJ	—	—	5	I	Calibration adjust pin
N.C.	—	—	6	—	No Connection
	—	—	7		
+	—	—	8	I	Positive input

6 Specifications

6.1 Absolute Maximum Ratings

over operating free-air temperature range (unless otherwise noted)[(1)(2)(3)(4)]

		MIN	MAX	UNIT
Reverse Current			15	mA
Forward Current			10	mA
Storage temperature, T_{stg}	8-Pin SOIC Package	−65	150	°C
	TO / TO-92 Package	−60	150	°C

(1) Stresses beyond those listed under *Absolute Maximum Ratings* may cause permanent damage to the device. These are stress ratings only, which do not imply functional operation of the device at these or any other conditions beyond those indicated under *Recommended Operating Conditions*. Exposure to absolute-maximum-rated conditions for extended periods may affect device reliability.
(2) Refer to RETS135H for military specifications.
(3) If Military/Aerospace specified devices are required, please contact the TI Sales Office/Distributors for availability and specifications.
(4) Soldering process must comply with the Reflow Temperature Profile specifications. Refer to http://www.ti.com/packaging.

6.2 Recommended Operating Conditions

over operating free-air temperature range (unless otherwise noted)

			MIN	NOM	MAX	UNIT
Specified Temperature	LM135, LM135A	Continuous ($T_{MIN} \le T_A \le T_{MAX}$)	−55		150	°C
		Intermittent [(1)]	150		200	
	LM235, LM235A	Continuous ($T_{MIN} \le T_A \le T_{MAX}$)	−40		125	°C
		Intermittent [(1)]	125		150	
	LM335, LM335A	Continuous ($T_{MIN} \le T_A \le T_{MAX}$)	−40		100	°C
		Intermittent [(1)]	100		125	
Forward Current			0.4	1	5	mA

(1) Continuous operation at these temperatures for 5,000 hours for LP package may decrease life expectancy of the device.

6.3 Thermal Information

THERMAL METRIC[(1)]		LM335 / LM335A	LM235 / LM235A	LM135 / LM135A	UNIT
		SOIC (D)	TO-92 (LP)	TO-46 (NDV)	
		8 PINS	3 PINS	3 PINS	
$R_{\theta JA}$	Junction-to-ambient thermal resistance	165	202	400	°C/W
$R_{\theta JC}$	Junction-to-case thermal resistance	—	170	—	

(1) For more information about traditional and new thermal metrics, see the *IC Package Thermal Metrics* application report, SPRA953.

6.4 Temperature Accuracy: LM135/LM235, LM135A/LM235A[(1)]

PARAMETER		TEST CONDITIONS	LM135A/LM235A			LM135/LM235			UNIT
			MIN	TYP	MAX	MIN	TYP	MAX	
Operating Output Voltage		T_C = 25°C, I_R = 1 mA	2.97	2.98	2.99	2.95	2.98	3.01	V
Uncalibrated Temperature Error		T_C = 25°C, I_R = 1 mA		0.5	1		1	3	°C
Uncalibrated Temperature Error		$T_{MIN} \le T_C \le T_{MAX}$, I_R = 1 mA		1.3	2.7		2	5	°C
Temperature Error with 25°C		$T_{MIN} \le T_C \le T_{MAX}$, I_R = 1 mA		0.3	1		0.5	1.5	°C
Calibration	Calibrated Error at Extended	$T_C = T_{MAX}$ (Intermittent)		2			2		°C
Temperature	Non-Linearity	I_R = 1 mA		0.3	0.5		0.3	1	°C

(1) Accuracy measurements are made in a well-stirred oil bath. For other conditions, self heating must be considered.

Copyright © 1999–2015, Texas Instruments Incorporated

6.5 Temperature Accuracy: LM335, LM335A (1)

PARAMETER		TEST CONDITIONS	LM335A			LM335			UNIT
			MIN	TYP	MAX	MIN	TYP	MAX	
Operating Output Voltage		T_C = 25°C, I_R = 1 mA	2.95	2.98	3.01	2.92	2.98	3.04	V
Uncalibrated Temperature Error		T_C = 25°C, I_R = 1 mA		1	3		2	6	°C
Uncalibrated Temperature Error		$T_{MIN} \le T_C \le T_{MAX}$, I_R = 1 mA		2	5		4	9	°C
Temperature Error with 25°C		$T_{MIN} \le T_C \le T_{MAX}$, I_R = 1 mA		0.5	1		1	2	°C
Calibration	Calibrated Error at Extended	$T_C = T_{MAX}$ (Intermittent)		2			2		°C
Temperature	Non-Linearity	I_R = 1 mA		0.3	1.5		0.3	1.5	°C

(1) Accuracy measurements are made in a well-stirred oil bath. For other conditions, self heating must be considered.

6.6 Electrical Characteristics

See (1).

PARAMETER	TEST CONDITIONS	LM135/LM235/LM135A/LM235A			LM335/LM335A			UNIT
		MIN	TYP	MAX	MIN	TYP	MAX	
Operating Output Voltage Change with Current	400 μA ≤ I_R ≤ 5 mA, At Constant Temperature		2.5	10		3	14	mV
Dynamic Impedance	I_R = 1 mA		0.5			0.6		Ω
Output Voltage Temperature Coefficient			10			10		mV/°C
Time Constant	Still Air		80			80		sec
	100 ft/Min Air		10			10		sec
	Stirred Oil		1			1		sec
Time Stability	T_C = 125°C		0.2			0.2		°C/khr

(1) Accuracy measurements are made in a well-stirred oil bath. For other conditions, self heating must be considered.

Copyright © 1999–2015, Texas Instruments Incorporated

6.7 Typical Characteristics

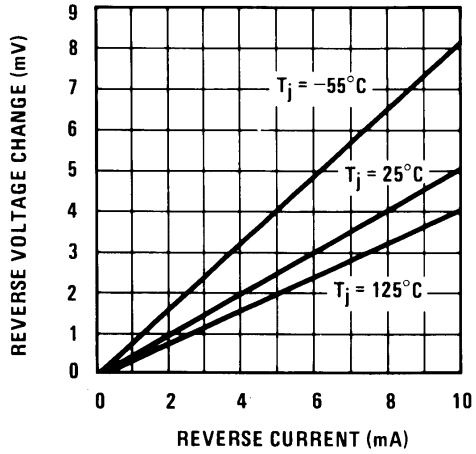

Figure 1. Reverse Voltage Change

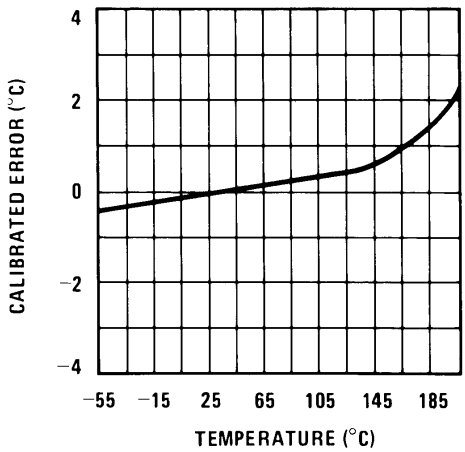

Figure 2. Calibrated Error

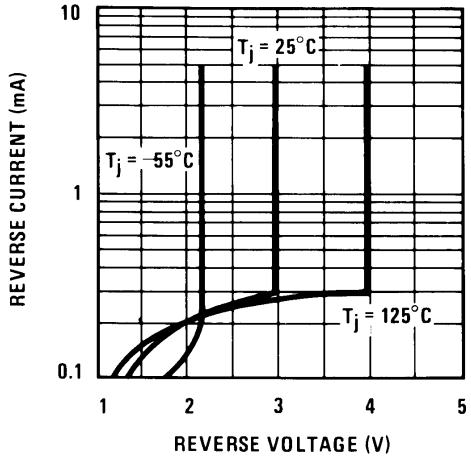

Figure 3. Reverse Characteristics

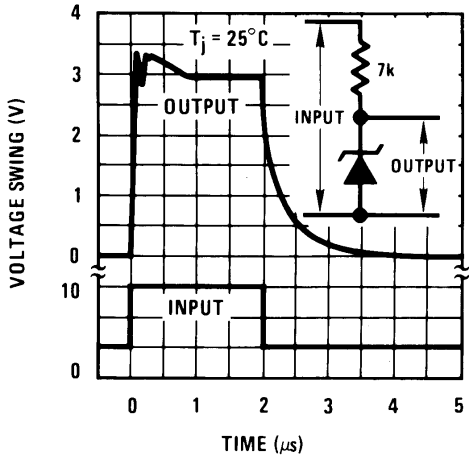

Figure 4. Response Time

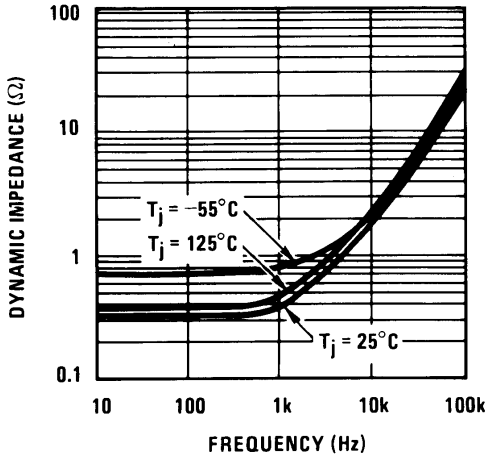

Figure 5. Dynamic Impedance

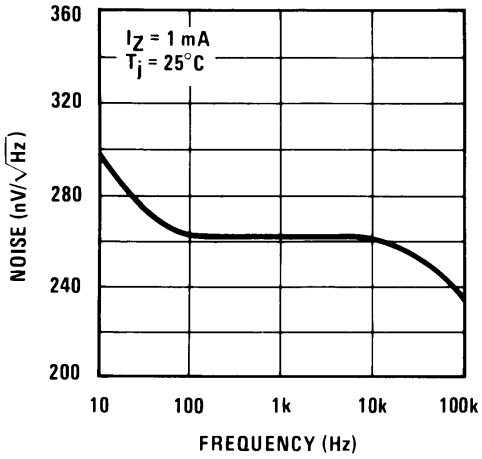

Figure 6. Noise Voltage

Copyright © 1999–2015, Texas Instruments Incorporated

Typical Characteristics (continued)

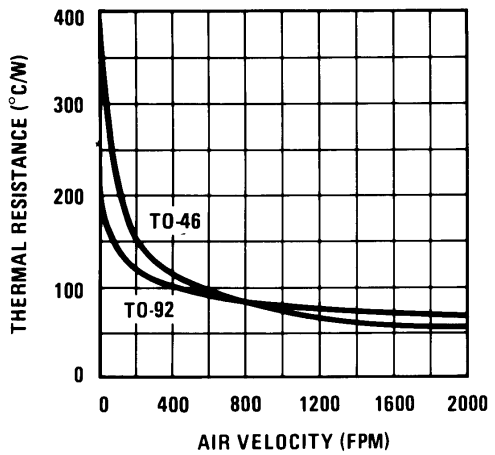

Figure 7. Thermal Resistance Junction To Air

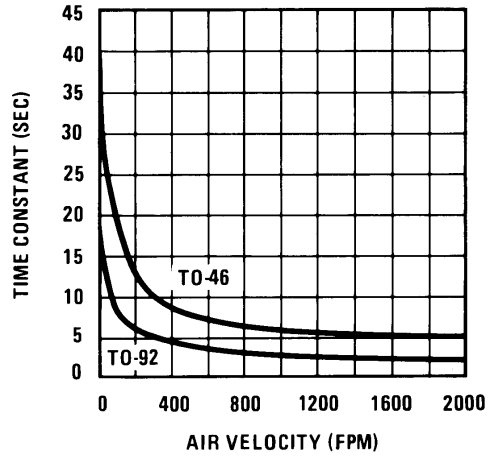

Figure 8. Thermal Time Constant

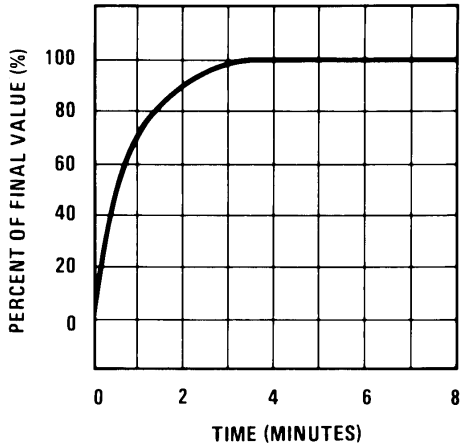

Figure 9. Thermal Response In Still Air

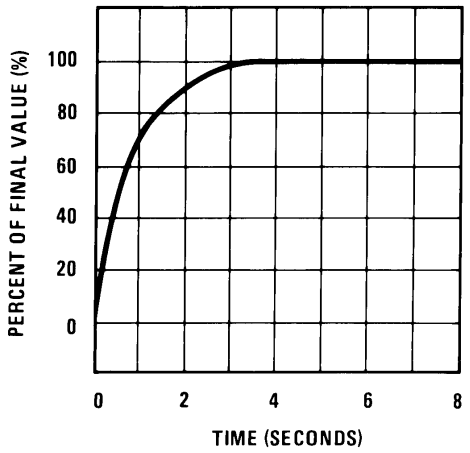

Figure 10. Thermal Response In Stirred Oil Bath

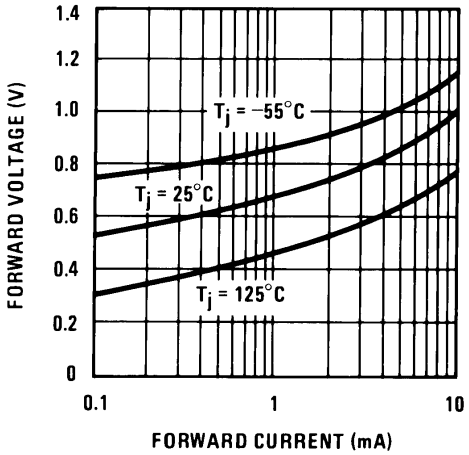

Figure 11. Forward Characteristics

7 Detailed Description

7.1 Overview

Applications for the LM135 include almost any type of temperature sensing over a −55°C to 150°C temperature range. The low impedance and linear output make interfacing to readout or control circuitry especially easy.

The LM135 operates over a −55°C to 150°C temperature range while the LM235 operates over a −40°C to 125°C temperature range. The LM335 operates from −40°C to 100°C.

Operating as a 2-terminal zener, the LM135 has a breakdown voltage directly proportional to absolute temperature at 10 mV/°K. With less than 1-Ω dynamic impedance, the device operates over a current range of 400 µA to 5 mA with virtually no change in performance. When calibrated at 25°C, the LM135 has typically less than 1°C error over a 100°C temperature range. Unlike other sensors, the LM135 has a linear output.

7.2 Functional Block Diagram

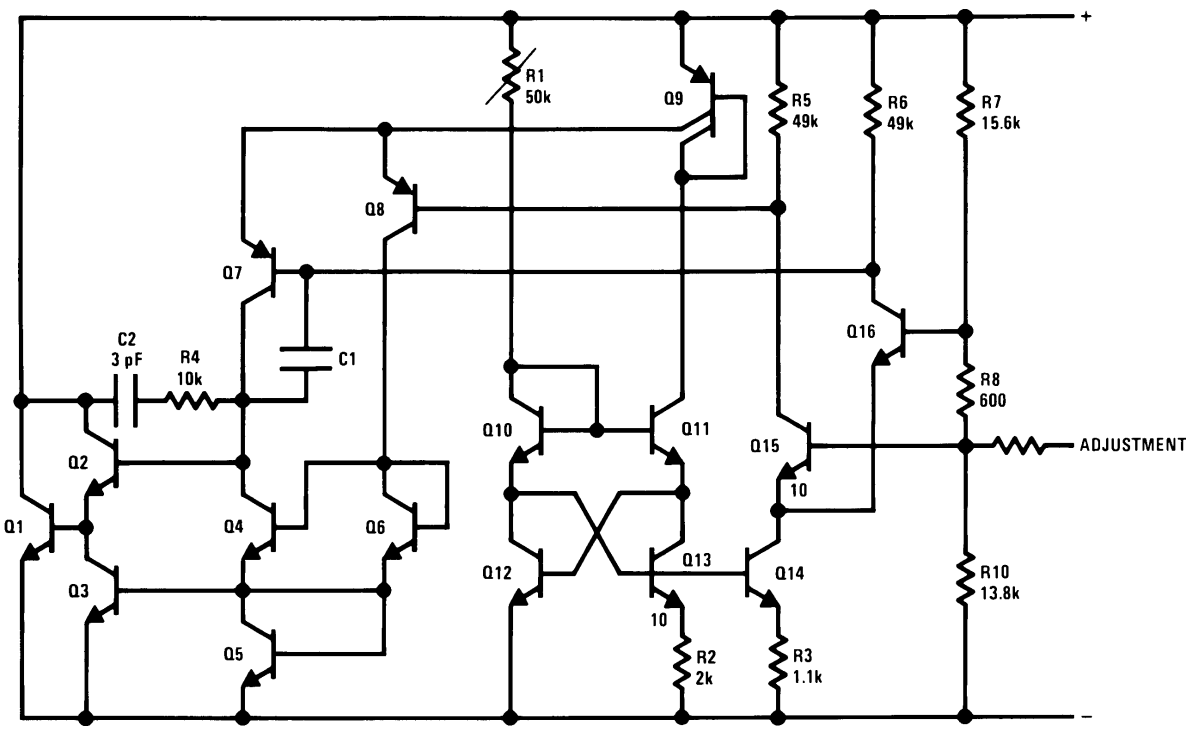

7.3 Feature Description

7.3.1 Temperature Calibration Using ADJ Pin

Included on the LM135 chip is an easy method of calibrating the device for higher accuracies. A pot connected across the LM135 with the arm tied to the adjustment terminal (as shown in Figure 12) allows a 1-point calibration of the sensor that corrects for inaccuracy over the full temperature range.

This single point calibration works because the output of the LM135 is proportional to absolute temperature with the extrapolated output of sensor going to 0-V output at 0 K (−273.15°C). Errors in output voltage versus temperature are only slope (or scale factor) errors so a slope calibration at one temperature corrects at all temperatures.

The output of the device (calibrated or uncalibrated) can be expressed as:

$$V_{OUT_T} = V_{OUT_{T_o}} \times \frac{T}{T_o}$$

where

Copyright © 1999–2015, Texas Instruments Incorporated

Feature Description (continued)

- T is the unknown temperature in degrees Kelvin
- T_o is a reference temperature in degrees Kelvin (1)

By calibrating the output to read correctly at one temperature the output at all temperatures is correct. Nominally the output is calibrated at 10 mV/K.

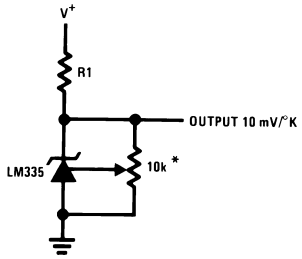

Calibrate for 2.982V at 25°C

Figure 12. Calibrated Sensor

7.4 Device Functional Modes

The LM135 has two functional modes calibrated and uncalibrated. For optimum accuracy, a one point calibration is recommended. For more information on calibration, see *Temperature Calibration Using ADJ Pin*.

8 Application and Implementation

NOTE

Information in the following applications sections is not part of the TI component specification, and TI does not warrant its accuracy or completeness. TI's customers are responsible for determining suitability of components for their purposes. Customers should validate and test their design implementation to confirm system functionality.

8.1 Application Information

To insure good sensing accuracy, several precautions must be taken. Like any temperature-sensing device, self-heating can reduce accuracy. The LM135 should be operated at the lowest current suitable for the application. Sufficient current, of course, must be available to drive both the sensor and the calibration pot at the maximum operating temperature as well as any external loads.

If the sensor is used in an ambient where the thermal resistance is constant, self-heating errors can be calibrated out. This is possible if the device is run with a temperature-stable current. Heating will then be proportional to zener voltage and therefore temperature. This makes the self-heating error proportional to absolute temperature the same as scale factor errors.

8.2 Typical Application

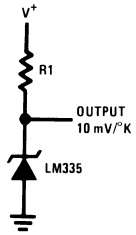

Figure 13. Basic Temperature Sensor

8.2.1 Design Requirements

Table 1. Design Parameters

PARAMETER	EXAMPLE VALUE
Accuracy at 25°C	±1°C
Accuracy from –55 °C to 150 °C	±2.7°C
Forward Current	1 mA
Temperature Slope	10m V/K

8.2.2 Detailed Design Procedure

For optimum accuracy, R1 is picked such that 1 mA flows through the sensor. Additional error can be introduced by varying load currents or varying supply voltage. The influence of these currents on the minimum and maximum reverse current flowing through the LM135 should be calculated and be maintained in the range of 0.4 mA to 5 mA. Minimizing the current variation through the LM135 will provide for the best accuracy. The Operating Output Voltage Change with Current specification can be used to calculate the additional error which could be up to 1 K maximum from the LM135A, for example.

Copyright © 1999–2015, Texas Instruments Incorporated

8.2.3 Application Curve

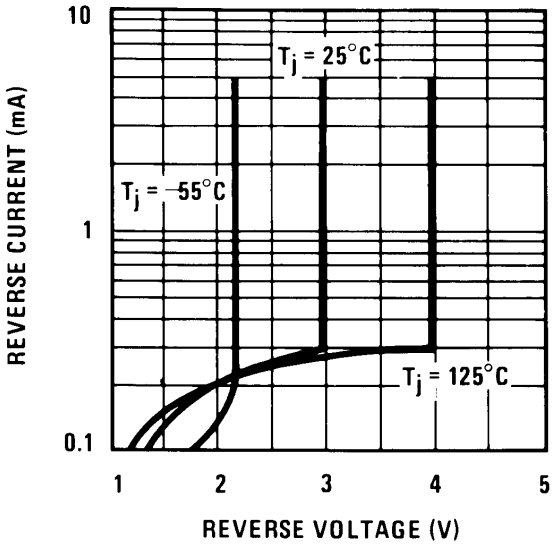

Figure 14. Reverse Characteristics

8.3 System Examples

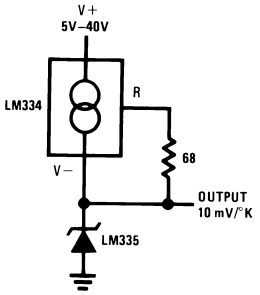

Figure 15. Wide Operating Supply

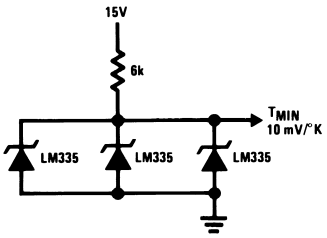

Figure 16. Minimum Temperature Sensing

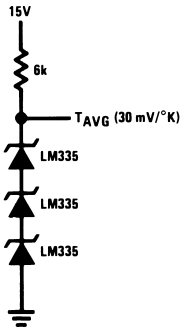

Wire length for 1°C error due to wire drop

Figure 17. Average Temperature Sensing

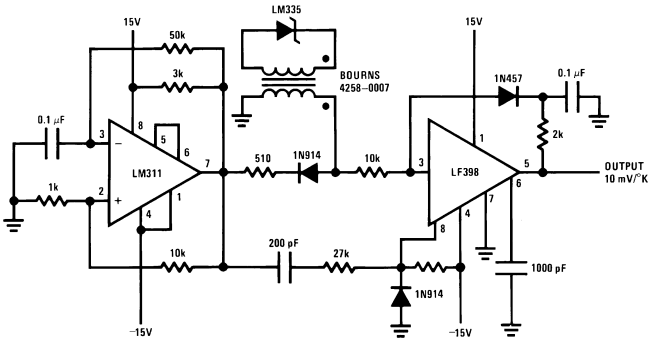

Figure 18. Isolated Temperature Sensor

System Examples (continued)

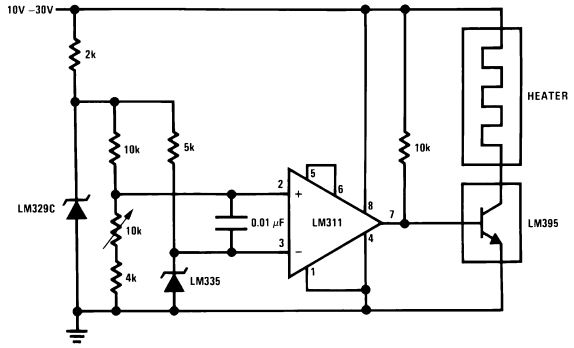

Figure 19. Simple Temperature Controller

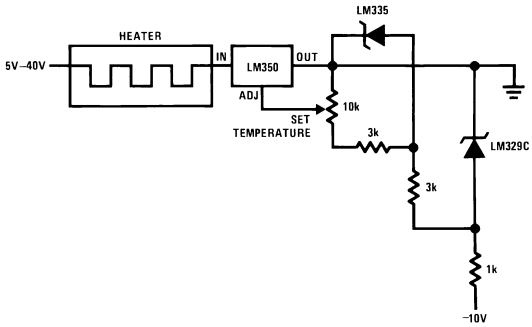

Figure 20. Simple Temperature Control

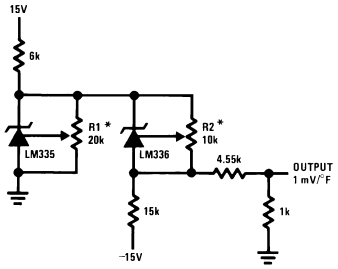

Adjust R2 for 2.554V across LM336.

Adjust R1 for correct output.

Figure 21. Ground Referred Fahrenheit Thermometer

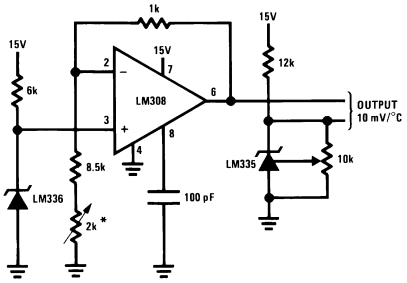

Adjust for 2.7315V at output of LM308

Figure 22. Centigrade Thermometer

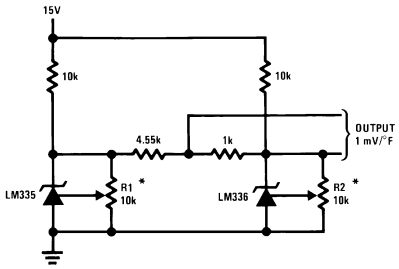

To calibrate adjust R2 for 2.554V across LM336.

Adjust R1 for correct output.

Figure 23. Fahrenheit Thermometer

Copyright © 1999–2015, Texas Instruments Incorporated

System Examples (continued)

8.3.1 Thermocouple Cold Junction Compensation

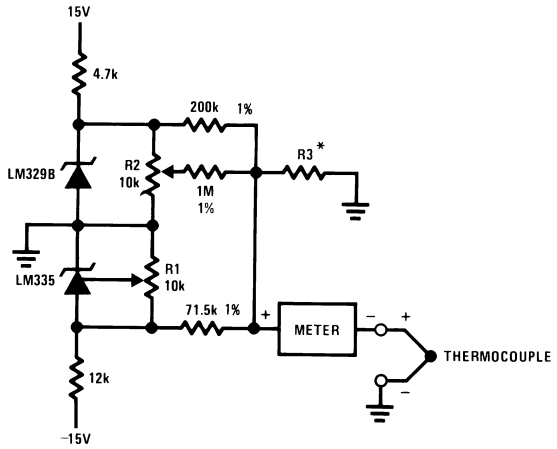

Compensation for Grounded Thermocouple

Select R3 for proper thermocouple type

Figure 24. Thermocouple Cold Junction Compensation

THERMO-COUPLE	R3 (±1%)	SEEBECK COEFFICIENT
J	377 Ω	52.3 µV/°C
T	308 Ω	42.8 µV/°C
K	293 Ω	40.8 µV/°C
S	45.8 Ω	6.4 µV/°C

Adjustments: Compensates for both sensor and resistor tolerances

1. Short LM329B
2. Adjust R1 for Seebeck Coefficient times ambient temperature (in degrees K) across R3.
3. Short LM335 and adjust R2 for voltage across R3 corresponding to thermocouple type.

J 14.32 mV K 11.17 mV

T 11.79 mV S 1.768 mV

THERMO-COUPLE	R3	R4	SEEBECK COEFFICIENT
J	1.05K	385Ω	52.3 µV/°C
T	856Ω	315Ω	42.8 µV/°C
K	816Ω	300Ω	40.8 µV/°C
S	128Ω	46.3Ω	6.4 µV/°C

Adjustments:

1. Adjust R1 for the voltage across R3 equal to the Seebeck Coefficient times ambient temperature in degrees Kelvin.
2. Adjust R2 for voltage across R4 corresponding to thermocouple.

J	14.32 mV	
T	11.79 mV	
K	11.17 mV	
S	1.768 mV	

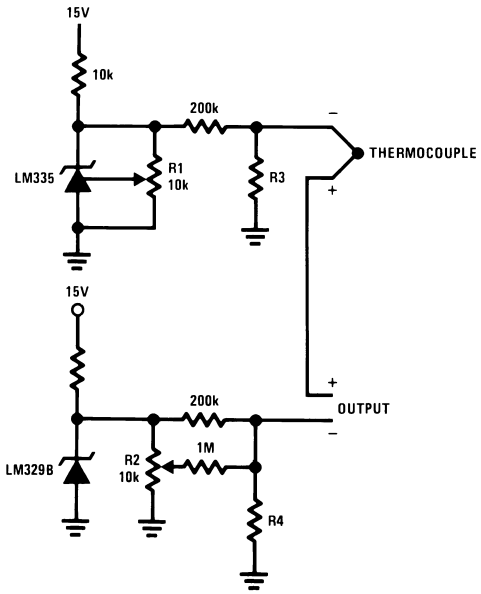

Select R3 and R4 for thermocouple type

Figure 25. Single Power Supply Cold Junction Compensation

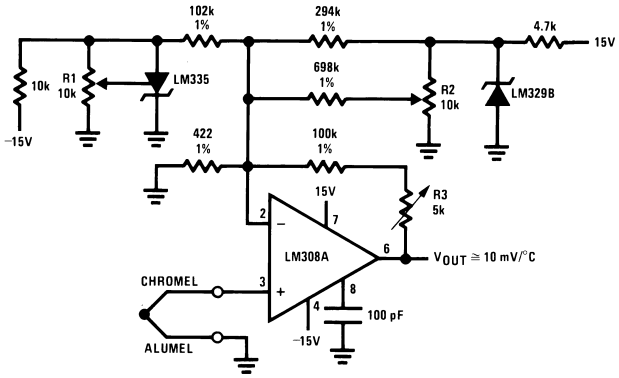

Terminate thermocouple reference junction in close proximity to LM335.

Adjustments:

1. Apply signal in place of thermocouple and adjust R3 for a gain of 245.7.

2. Short non-inverting input of LM308A and output of LM329B to ground.

3. Adjust R1 so that V_{OUT} = 2.982V @ 25°C.

4. Remove short across LM329B and adjust R2 so that V_{OUT} = 246 mV @ 25°C.

5. Remove short across thermocouple.

Figure 26. Centigrade Calibrated Thermocouple Thermometer

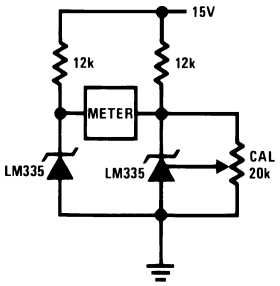

Figure 27. Differential Temperature Sensor

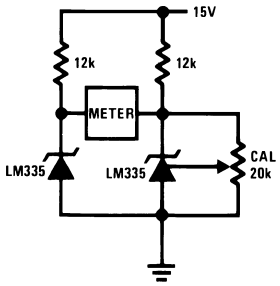

Figure 28. Differential Temperature Sensor

Copyright © 1999–2015, Texas Instruments Incorporated

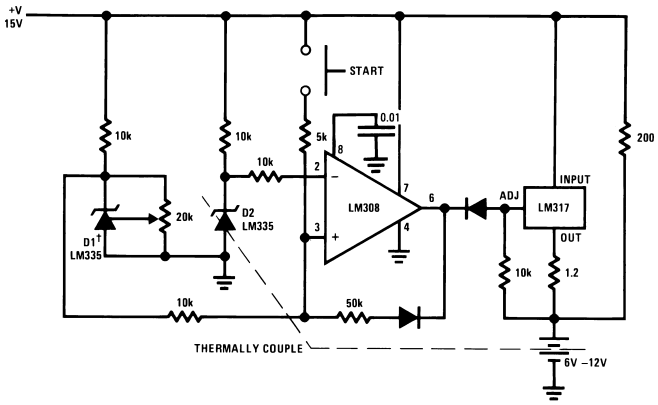

Adjust D1 to 50 mV greater V_Z than D2.

Charge terminates on 5°C temperature rise.

Couple D2 to battery.

Figure 29. Fast Charger For Nickel-Cadmium Batteries

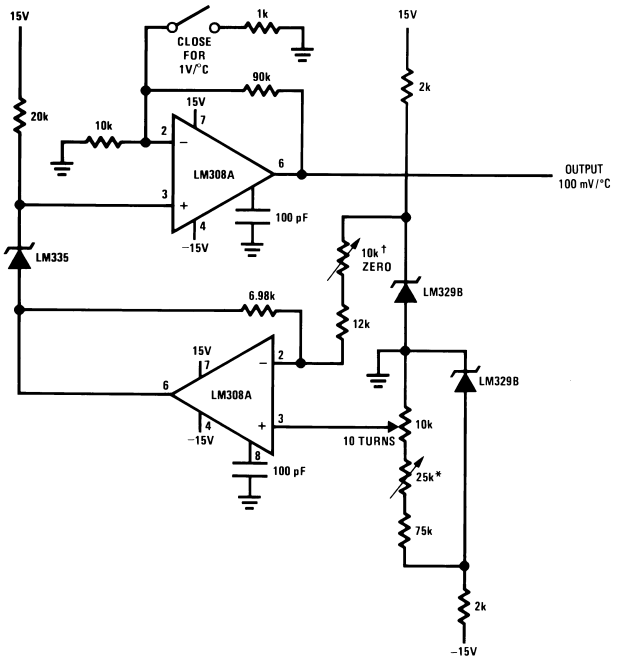

Adjust for zero with sensor at 0°C and 10T pot set at 0°C

Adjust for zero output with 10T pot set at 100°C and sensor at 100°C

Output reads difference between temperature and dial setting of 10T pot

Figure 30. Variable Offset Thermometer

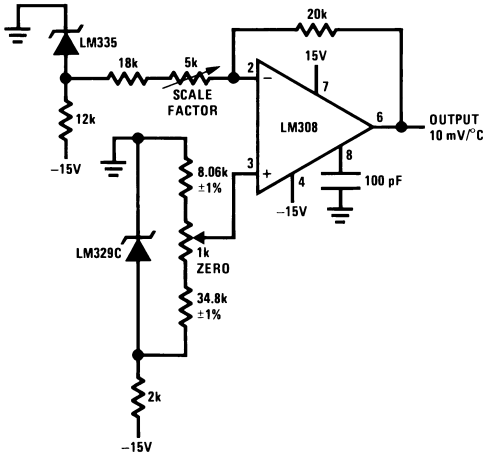

Figure 31. Ground Referred Centigrade Thermometer

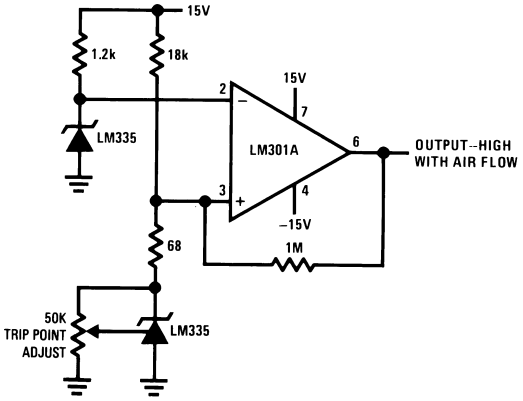

*Self heating is used to detect air flow

Figure 32. Air Flow Detector

9 Power Supply Recommendations

Ensure the LM335 is biased properly with a current ranging 0.4 mA to 5 mA.

10 Layout

10.1 Layout Guidelines

The LM135 is applied easily in the same way as other integrated-circuit temperature sensors. Glue or cement the device to a surface and the temperature should be within about 0.01°C of the surface temperature.

Efficient temperature transfer assumes that the ambient air temperature is almost the same as the surface temperature where the LM135 leads are attached. If there is a great difference between the air temperature and the surface temperature, the actual temperature of the LM135 die would be at an intermediate temperature between the two temperatures. For example, the TO-92 plastic package, where the copper leads are the principal thermal path to carry heat into the device, can be greatly affected by airflow. The temperature sensed by the TO92 package could greatly depend on velocity of the airflow as well.

To lessen the affect of airflow, ensure that the wiring to the LM135 (leads and wires connected to the leads) is held at the same temperature as the surface temperature that is targeted for measurement. To insure that the temperature of the LM135 die is not affected by the air temperature, mechanically connect the LM135 leads with a bead of epoxy to the surface being measured. If air temperature is targeted for measurement ensure that the PCB surface temperature is close to the air temperature. Keep the LM135 away from offending PCB heat sources such as power regulators. One method commonly used for thermal isolation is to route a thermal well as shown in Figure 33 with the smallest possible geometry traces connecting back to rest of the PCB.

10.2 Layout Example

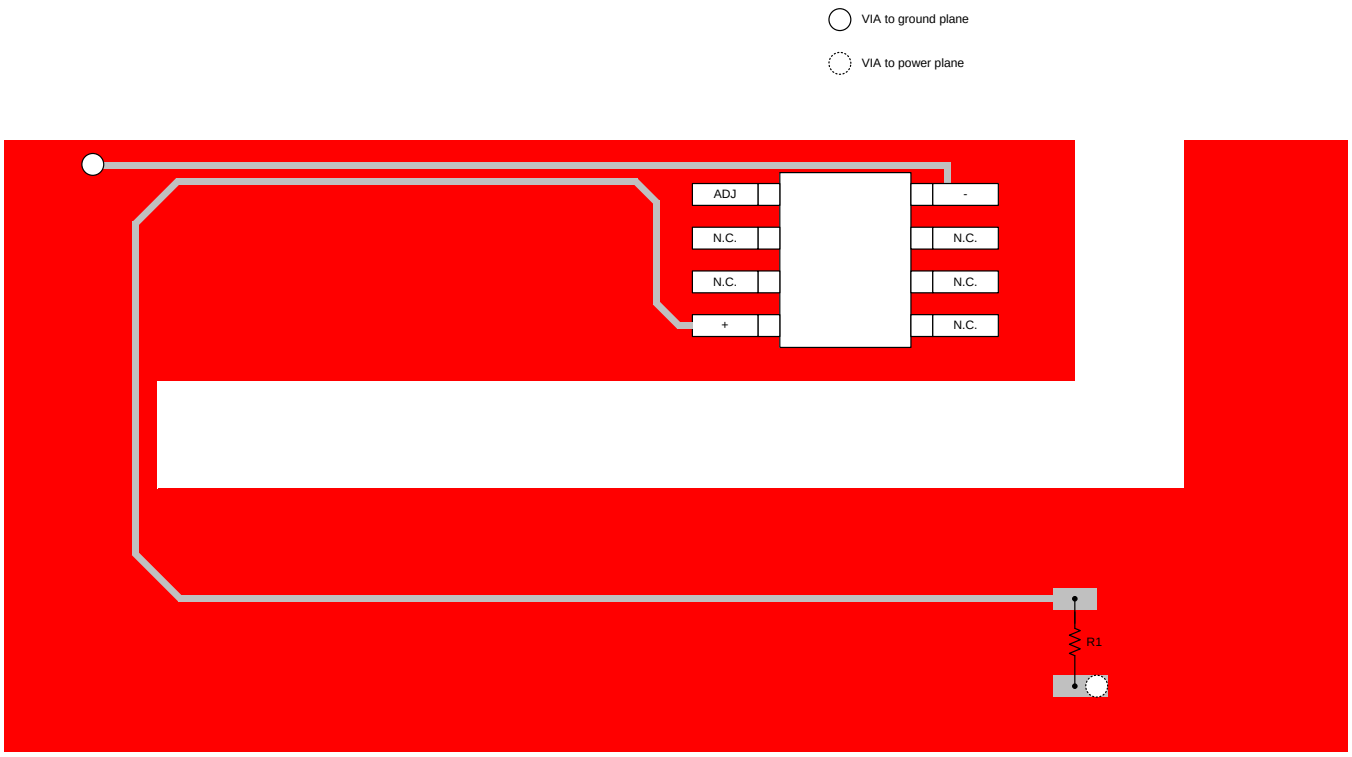

Figure 33. Layout Example

Copyright © 1999–2015, Texas Instruments Incorporated

10.3 Waterproofing Sensors

Meltable inner-core, heat-shrinkable tubing, such as manufactured by Raychem, can be used to make low-cost waterproof sensors. The LM335 is inserted into the tubing about 0.5 inches from the end and the tubing heated above the melting point of the core. The unfilled 0.5-inch end melts and provides a seal over the device.

10.4 Mounting the Sensor at the End of a Cable

The main error due to a long wire is caused by the voltage drop across that wire caused by the reverse current biasing the LM135 on. Table 2 shows the wire AWG and the length of wire that would cause 1°C error.

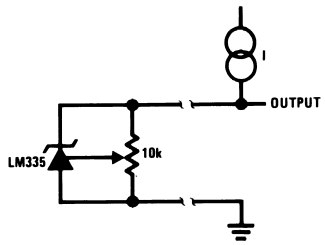

Figure 34. Cable Connected Temperature Sensor

Table 2. Wire Length for 1°C Error Due to Wire Drop

	I_R = 1 mA	I_R = 0.5 mA (1)
AWG	**FEET**	**FEET**
14	4000	8000
16	2500	5000
18	1600	3200
20	1000	2000
22	625	1250
24	400	800

(1) For I_R = 0.5 mA, the trim pot must be deleted.

11 Device and Documentation Support

11.1 Device Support

11.1.1 Device Nomenclature

Operating Output Voltage: The voltage appearing across the positive and negative terminals of the device at specified conditions of operating temperature and current.

Uncalibrated Temperature Error: The error between the operating output voltage at 10 mV/°K and case temperature at specified conditions of current and case temperature.

Calibrated Temperature Error: The error between operating output voltage and case temperature at 10 mV/°K over a temperature range at a specified operating current with the 25°C error adjusted to zero.

11.2 Related Links

The table below lists quick access links. Categories include technical documents, support and community resources, tools and software, and quick access to sample or buy.

Table 3. Related Links

PARTS	PRODUCT FOLDER	SAMPLE & BUY	TECHNICAL DOCUMENTS	TOOLS & SOFTWARE	SUPPORT & COMMUNITY
LM135	Click here	Click here	Click here	Click here	Click here
LM135A	Click here	Click here	Click here	Click here	Click here
LM235	Click here	Click here	Click here	Click here	Click here
LM235A	Click here	Click here	Click here	Click here	Click here
LM335	Click here	Click here	Click here	Click here	Click here
LM335A	Click here	Click here	Click here	Click here	Click here

11.3 Trademarks

All trademarks are the property of their respective owners.

11.4 Electrostatic Discharge Caution

These devices have limited built-in ESD protection. The leads should be shorted together or the device placed in conductive foam during storage or handling to prevent electrostatic damage to the MOS gates.

11.5 Glossary

SLYZ022 — *TI Glossary*.

This glossary lists and explains terms, acronyms, and definitions.

12 Mechanical, Packaging, and Orderable Information

The following pages include mechanical, packaging, and orderable information. This information is the most current data available for the designated devices. This data is subject to change without notice and revision of this document. For browser-based versions of this data sheet, refer to the left-hand navigation.

Copyright © 1999–2015, Texas Instruments Incorporated

PACKAGING INFORMATION

Orderable Device	Status (1)	Package Type	Package Drawing	Pins	Package Qty	Eco Plan (2)	Lead/Ball Finish (6)	MSL Peak Temp (3)	Op Temp (°C)	Device Marking (4/5)	Samples
LM135AH	ACTIVE	TO	NDV	3	500	TBD	Call TI	Call TI	-55 to 150	(LM135AH ~ LM135AH)	Samples
LM135AH/NOPB	ACTIVE	TO	NDV	3	500	Green (RoHS & no Sb/Br)	Call TI	Level-1-NA-UNLIM	-55 to 150	(LM135AH ~ LM135AH)	Samples
LM135H	ACTIVE	TO	NDV	3	500	TBD	Call TI	Call TI	-55 to 150	(LM135H ~ LM135H)	Samples
LM135H/NOPB	ACTIVE	TO	NDV	3	500	Green (RoHS & no Sb/Br)	Call TI	Level-1-NA-UNLIM	-55 to 150	(LM135H ~ LM135H)	Samples
LM235AH	ACTIVE	TO	NDV	3	500	TBD	Call TI	Call TI	-40 to 125	(LM235AH ~ LM235AH)	Samples
LM235AH/NOPB	ACTIVE	TO	NDV	3	500	Green (RoHS & no Sb/Br)	Call TI	Level-1-NA-UNLIM	-40 to 125	(LM235AH ~ LM235AH)	Samples
LM235H	ACTIVE	TO	NDV	3	500	TBD	Call TI	Call TI	-40 to 125	(LM235H ~ LM235H)	Samples
LM235H/NOPB	ACTIVE	TO	NDV	3	500	Green (RoHS & no Sb/Br)	Call TI	Level-1-NA-UNLIM	-40 to 125	(LM235H ~ LM235H)	Samples
LM335A MWC	ACTIVE	WAFERSALE	YS	0	1	Green (RoHS & no Sb/Br)	Call TI	Level-1-NA-UNLIM	-40 to 85		Samples
LM335AH	ACTIVE	TO	NDV	3	1000	TBD	Call TI	Call TI	-40 to 100	(LM335AH ~ LM335AH)	Samples
LM335AH/NOPB	ACTIVE	TO	NDV	3	1000	Green (RoHS & no Sb/Br)	Call TI	Level-1-NA-UNLIM	-40 to 100	(LM335AH ~ LM335AH)	Samples
LM335AM	NRND	SOIC	D	8	95	TBD	Call TI	Call TI	-40 to 100	LM335 AM	
LM335AM/NOPB	ACTIVE	SOIC	D	8	95	Green (RoHS & no Sb/Br)	CU SN	Level-1-260C-UNLIM	-40 to 100	LM335 AM	Samples
LM335AMX	NRND	SOIC	D	8	2500	TBD	Call TI	Call TI	-40 to 100	LM335 AM	
LM335AMX/NOPB	ACTIVE	SOIC	D	8	2500	Green (RoHS & no Sb/Br)	CU SN	Level-1-260C-UNLIM	-40 to 100	LM335 AM	Samples
LM335AZ/LFT1	ACTIVE	TO-92	LP	3	2000	Green (RoHS & no Sb/Br)	CU SN	N / A for Pkg Type		LM335 AZ	Samples
LM335AZ/NOPB	ACTIVE	TO-92	LP	3	1800	Green (RoHS & no Sb/Br)	CU SN	N / A for Pkg Type	-40 to 100	LM335 AZ	Samples

Orderable Device	Status (1)	Package Type	Package Drawing	Pins	Package Qty	Eco Plan (2)	Lead/Ball Finish (6)	MSL Peak Temp (3)	Op Temp (°C)	Device Marking (4/5)	Samples
LM335H	ACTIVE	TO	NDV	3	1000	TBD	Call TI	Call TI	-40 to 100	(LM335H ~ LM335H)	Samples
LM335H/NOPB	ACTIVE	TO	NDV	3	1000	Green (RoHS & no Sb/Br)	Call TI	Level-1-NA-UNLIM	-40 to 100	(LM335H ~ LM335H)	Samples
LM335M	NRND	SOIC	D	8	95	TBD	Call TI	Call TI	-40 to 100	LM335 M	
LM335M/NOPB	ACTIVE	SOIC	D	8	95	Green (RoHS & no Sb/Br)	CU SN	Level-1-260C-UNLIM	-40 to 100	LM335 M	Samples
LM335MX	NRND	SOIC	D	8		TBD	Call TI	Call TI	-40 to 100	LM335 M	
LM335MX/NOPB	ACTIVE	SOIC	D	8	2500	Green (RoHS & no Sb/Br)	CU SN	Level-1-260C-UNLIM	-40 to 100	LM335 M	Samples
LM335Z/LFT7	ACTIVE	TO-92	LP	3	2000	Green (RoHS & no Sb/Br)	CU SN	N / A for Pkg Type		LM335 Z	Samples
LM335Z/NOPB	ACTIVE	TO-92	LP	3	1800	Green (RoHS & no Sb/Br)	CU SN	N / A for Pkg Type	-40 to 100	LM335 Z	Samples

(1) The marketing status values are defined as follows:
ACTIVE: Product device recommended for new designs.
LIFEBUY: TI has announced that the device will be discontinued, and a lifetime-buy period is in effect.
NRND: Not recommended for new designs. Device is in production to support existing customers, but TI does not recommend using this part in a new design.
PREVIEW: Device has been announced but is not in production. Samples may or may not be available.
OBSOLETE: TI has discontinued the production of the device.

(2) Eco Plan - The planned eco-friendly classification: Pb-Free (RoHS), Pb-Free (RoHS Exempt), or Green (RoHS & no Sb/Br) - please check http://www.ti.com/productcontent for the latest availability information and additional product content details.
TBD: The Pb-Free/Green conversion plan has not been defined.
Pb-Free (RoHS): TI's terms "Lead-Free" or "Pb-Free" mean semiconductor products that are compatible with the current RoHS requirements for all 6 substances, including the requirement that lead not exceed 0.1% by weight in homogeneous materials. Where designed to be soldered at high temperatures, TI Pb-Free products are suitable for use in specified lead-free processes.
Pb-Free (RoHS Exempt): This component has a RoHS exemption for either 1) lead-based flip-chip solder bumps used between the die and package, or 2) lead-based die adhesive used between the die and leadframe. The component is otherwise considered Pb-Free (RoHS compatible) as defined above.
Green (RoHS & no Sb/Br): TI defines "Green" to mean Pb-Free (RoHS compatible), and free of Bromine (Br) and Antimony (Sb) based flame retardants (Br or Sb do not exceed 0.1% by weight in homogeneous material)

(3) MSL, Peak Temp. - The Moisture Sensitivity Level rating according to the JEDEC industry standard classifications, and peak solder temperature.

(4) There may be additional marking, which relates to the logo, the lot trace code information, or the environmental category on the device.

(5) Multiple Device Markings will be inside parentheses. Only one Device Marking contained in parentheses and separated by a "~" will appear on a device. If a line is indented then it is a continuation of the previous line and the two combined represent the entire Device Marking for that device.

(6) Lead/Ball Finish - Orderable Devices may have multiple material finish options. Finish options are separated by a vertical ruled line. Lead/Ball Finish values may wrap to two lines if the finish value exceeds the maximum column width.

Important Information and Disclaimer: The information provided on this page represents TI's knowledge and belief as of the date that it is provided. TI bases its knowledge and belief on information provided by third parties, and makes no representation or warranty as to the accuracy of such information. Efforts are underway to better integrate information from third parties. TI has taken and continues to take reasonable steps to provide representative and accurate information but may not have conducted destructive testing or chemical analysis on incoming materials and chemicals. TI and TI suppliers consider certain information to be proprietary, and thus CAS numbers and other limited information may not be available for release.

In no event shall TI's liability arising out of such information exceed the total purchase price of the TI part(s) at issue in this document sold by TI to Customer on an annual basis.

TAPE AND REEL INFORMATION

REEL DIMENSIONS

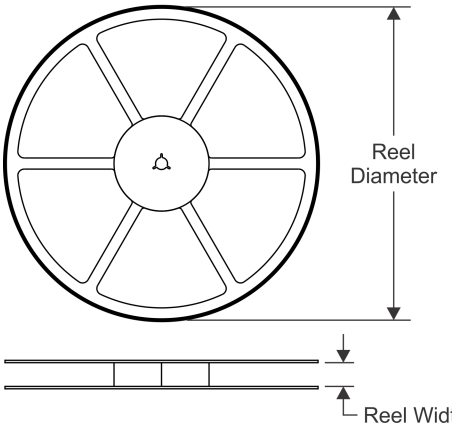

TAPE DIMENSIONS

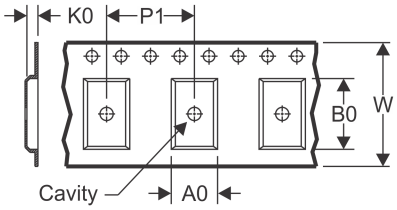

A0	Dimension designed to accommodate the component width
B0	Dimension designed to accommodate the component length
K0	Dimension designed to accommodate the component thickness
W	Overall width of the carrier tape
P1	Pitch between successive cavity centers

QUADRANT ASSIGNMENTS FOR PIN 1 ORIENTATION IN TAPE

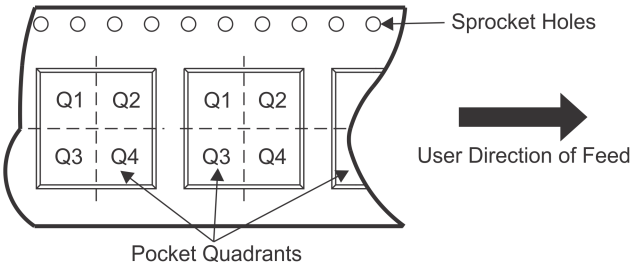

*All dimensions are nominal

Device	Package Type	Package Drawing	Pins	SPQ	Reel Diameter (mm)	Reel Width W1 (mm)	A0 (mm)	B0 (mm)	K0 (mm)	P1 (mm)	W (mm)	Pin1 Quadrant
LM335AMX	SOIC	D	8	2500	330.0	12.4	6.5	5.4	2.0	8.0	12.0	Q1
LM335AMX/NOPB	SOIC	D	8	2500	330.0	12.4	6.5	5.4	2.0	8.0	12.0	Q1
LM335MX/NOPB	SOIC	D	8	2500	330.0	12.4	6.5	5.4	2.0	8.0	12.0	Q1

TAPE AND REEL BOX DIMENSIONS

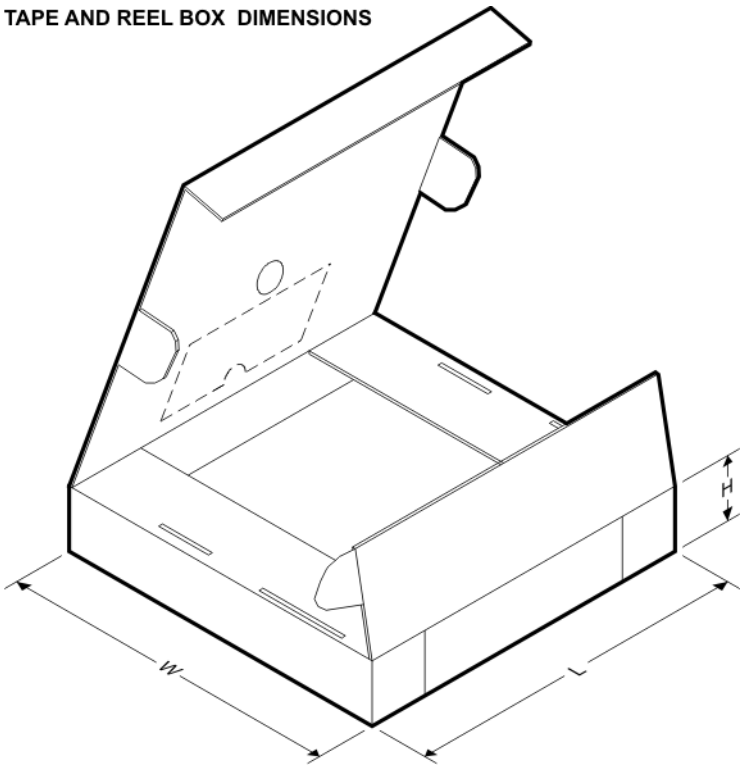

*All dimensions are nominal

Device	Package Type	Package Drawing	Pins	SPQ	Length (mm)	Width (mm)	Height (mm)
LM335AMX	SOIC	D	8	2500	367.0	367.0	35.0
LM335AMX/NOPB	SOIC	D	8	2500	367.0	367.0	35.0
LM335MX/NOPB	SOIC	D	8	2500	367.0	367.0	35.0

NDV0003H

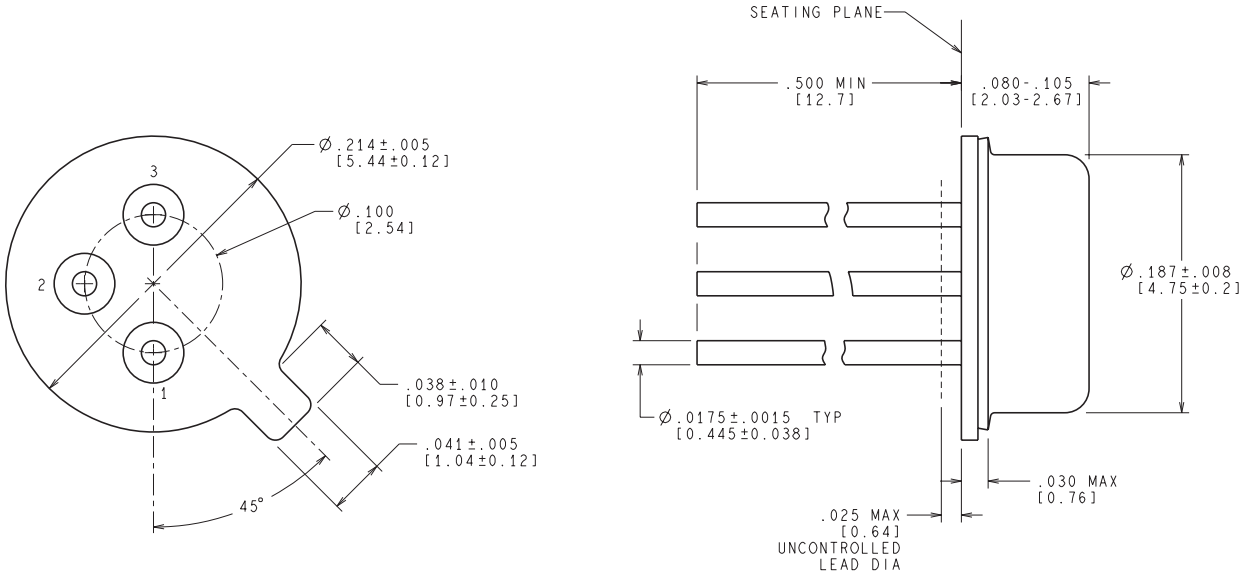

CONTROLLING DIMENSION IS INCH
VALUES IN [ ] ARE IN MILLIMETERS

H03H (Rev F)

D (R–PDSO–G8) PLASTIC SMALL OUTLINE

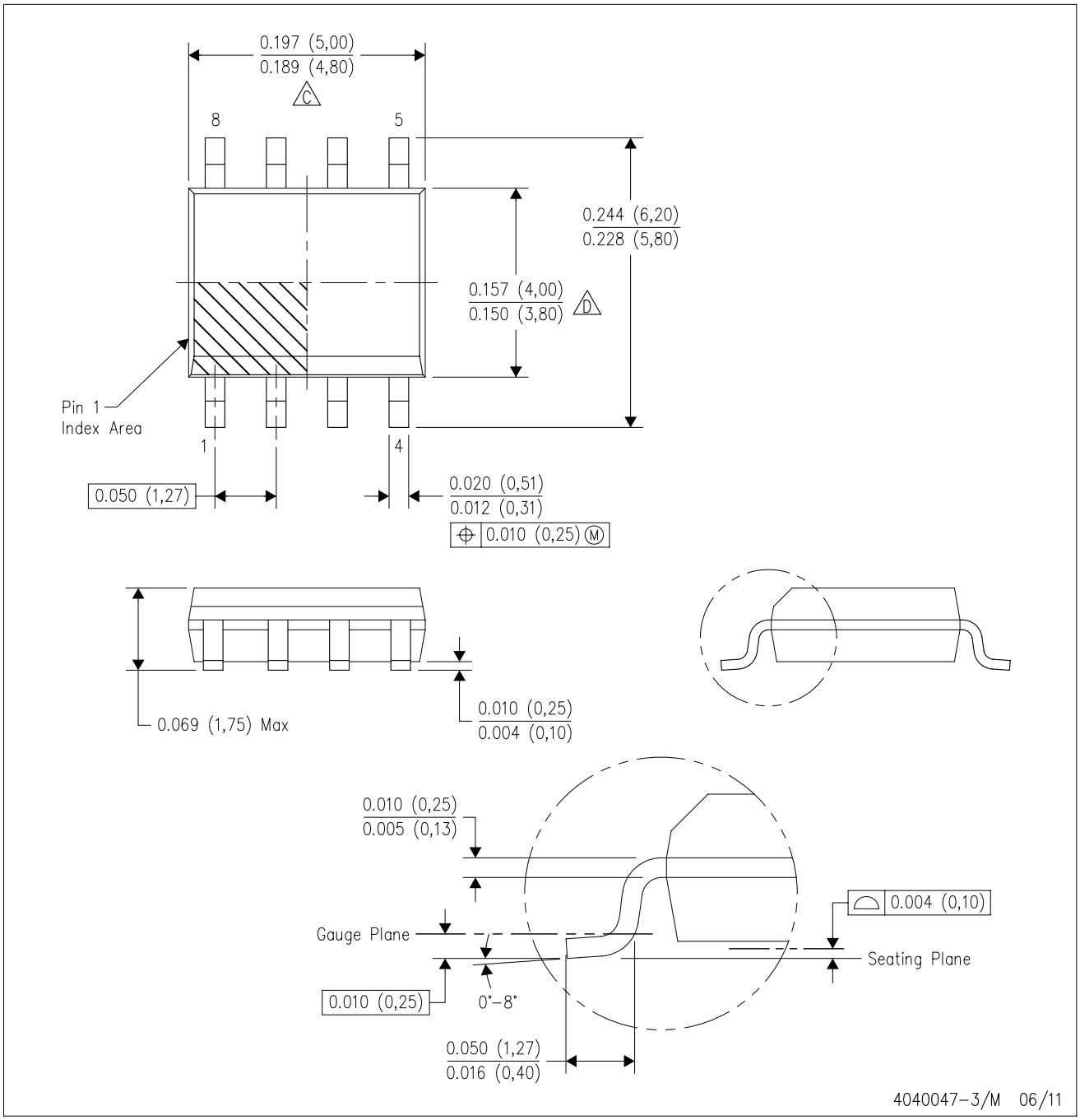

NOTES:
A. All linear dimensions are in inches (millimeters).
B. This drawing is subject to change without notice.
C. Body length does not include mold flash, protrusions, or gate burrs. Mold flash, protrusions, or gate burrs shall not exceed 0.006 (0,15) each side.
D. Body width does not include interlead flash. Interlead flash shall not exceed 0.017 (0,43) each side.
E. Reference JEDEC MS–012 variation AA.

LP (O–PBCY–W3) PLASTIC CYLINDRICAL PACKAGE

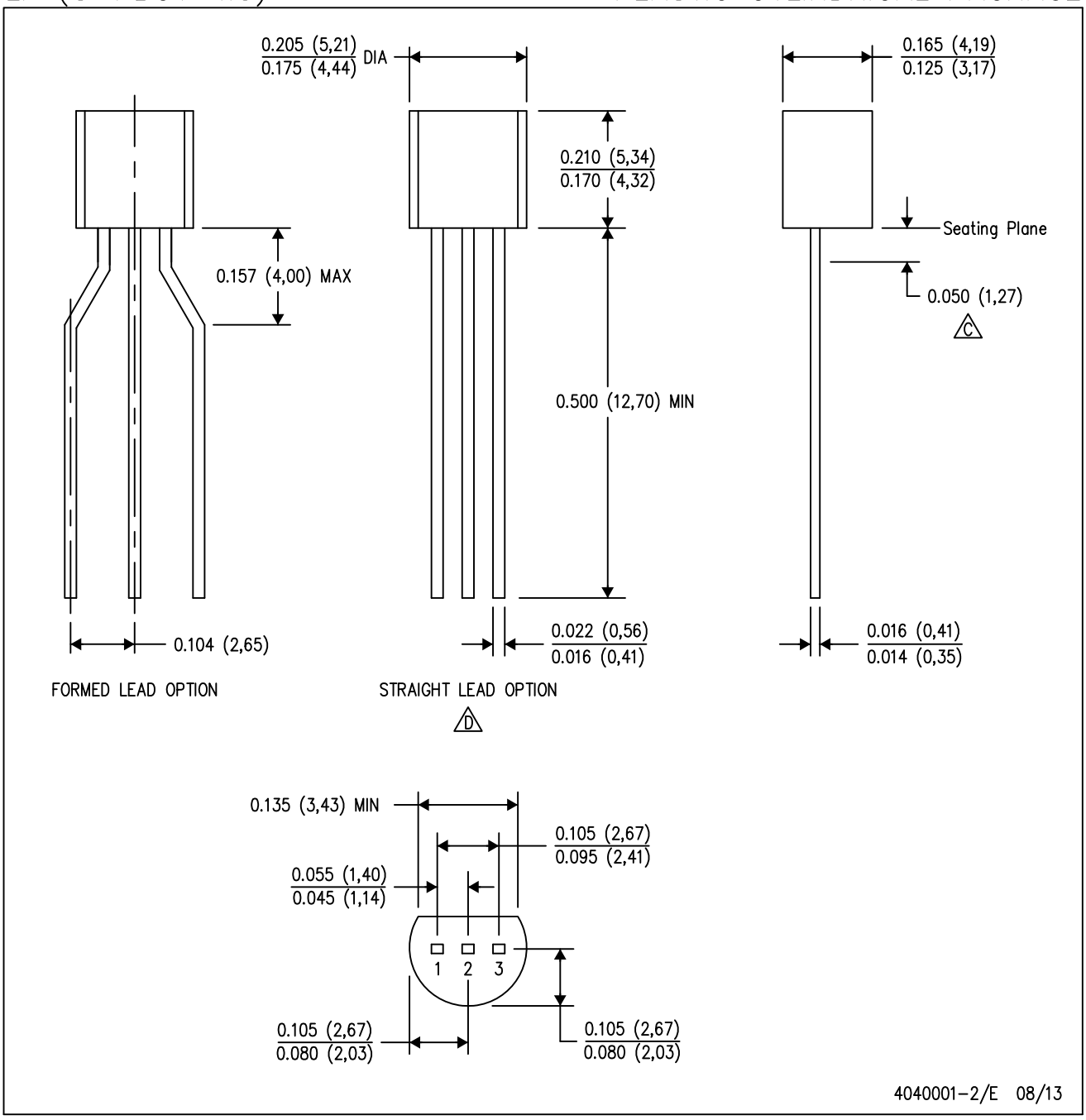

NOTES: A. All linear dimensions are in inches (millimeters).
B. This drawing is subject to change without notice.
C. Lead dimensions are not controlled within this area.
D. Falls within JEDEC TO–226 Variation AA (TO–226 replaces TO–92).
E. Shipping Method:
Straight lead option available in bulk pack only.
Formed lead option available in tape & reel or ammo pack.
Specific products can be offered in limited combinations of shipping mediums and lead options.
Consult product folder for more information on available options.

LP (O–PBCY–W3) PLASTIC CYLINDRICAL PACKAGE

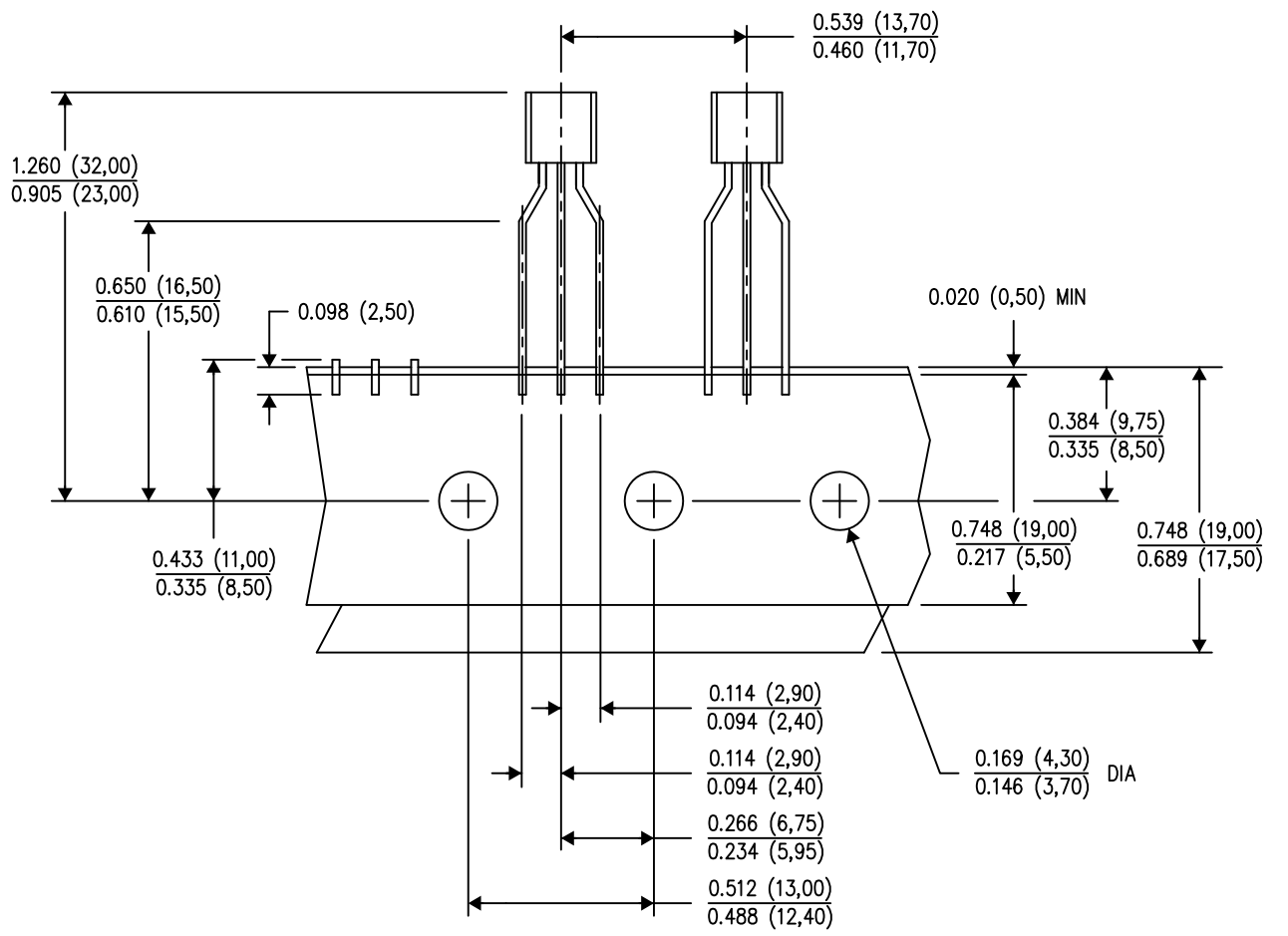

TAPE & REEL

4040001–3/E 08/13

NOTES:
A. All linear dimensions are in inches (millimeters).
B. This drawing is subject to change without notice.
C. Tape and Reel information for the Formed Lead Option package.

IMPORTANT NOTICE

Texas Instruments Incorporated and its subsidiaries (TI) reserve the right to make corrections, enhancements, improvements and other changes to its semiconductor products and services per JESD46, latest issue, and to discontinue any product or service per JESD48, latest issue. Buyers should obtain the latest relevant information before placing orders and should verify that such information is current and complete. All semiconductor products (also referred to herein as “components”) are sold subject to TI’s terms and conditions of sale supplied at the time of order acknowledgment.

TI warrants performance of its components to the specifications applicable at the time of sale, in accordance with the warranty in TI’s terms and conditions of sale of semiconductor products. Testing and other quality control techniques are used to the extent TI deems necessary to support this warranty. Except where mandated by applicable law, testing of all parameters of each component is not necessarily performed.

TI assumes no liability for applications assistance or the design of Buyers’ products. Buyers are responsible for their products and applications using TI components. To minimize the risks associated with Buyers’ products and applications, Buyers should provide adequate design and operating safeguards.

TI does not warrant or represent that any license, either express or implied, is granted under any patent right, copyright, mask work right, or other intellectual property right relating to any combination, machine, or process in which TI components or services are used. Information published by TI regarding third-party products or services does not constitute a license to use such products or services or a warranty or endorsement thereof. Use of such information may require a license from a third party under the patents or other intellectual property of the third party, or a license from TI under the patents or other intellectual property of TI.

Reproduction of significant portions of TI information in TI data books or data sheets is permissible only if reproduction is without alteration and is accompanied by all associated warranties, conditions, limitations, and notices. TI is not responsible or liable for such altered documentation. Information of third parties may be subject to additional restrictions.

Resale of TI components or services with statements different from or beyond the parameters stated by TI for that component or service voids all express and any implied warranties for the associated TI component or service and is an unfair and deceptive business practice. TI is not responsible or liable for any such statements.

Buyer acknowledges and agrees that it is solely responsible for compliance with all legal, regulatory and safety-related requirements concerning its products, and any use of TI components in its applications, notwithstanding any applications-related information or support that may be provided by TI. Buyer represents and agrees that it has all the necessary expertise to create and implement safeguards which anticipate dangerous consequences of failures, monitor failures and their consequences, lessen the likelihood of failures that might cause harm and take appropriate remedial actions. Buyer will fully indemnify TI and its representatives against any damages arising out of the use of any TI components in safety-critical applications.

In some cases, TI components may be promoted specifically to facilitate safety-related applications. With such components, TI’s goal is to help enable customers to design and create their own end-product solutions that meet applicable functional safety standards and requirements. Nonetheless, such components are subject to these terms.

No TI components are authorized for use in FDA Class III (or similar life-critical medical equipment) unless authorized officers of the parties have executed a special agreement specifically governing such use.

Only those TI components which TI has specifically designated as military grade or “enhanced plastic” are designed and intended for use in military/aerospace applications or environments. Buyer acknowledges and agrees that any military or aerospace use of TI components which have ***not*** been so designated is solely at the Buyer's risk, and that Buyer is solely responsible for compliance with all legal and regulatory requirements in connection with such use.

TI has specifically designated certain components as meeting ISO/TS16949 requirements, mainly for automotive use. In any case of use of non-designated products, TI will not be responsible for any failure to meet ISO/TS16949.

Products		**Applications**	
Audio	www.ti.com/audio	Automotive and Transportation	www.ti.com/automotive
Amplifiers	amplifier.ti.com	Communications and Telecom	www.ti.com/communications
Data Converters	dataconverter.ti.com	Computers and Peripherals	www.ti.com/computers
DLP® Products	www.dlp.com	Consumer Electronics	www.ti.com/consumer-apps
DSP	dsp.ti.com	Energy and Lighting	www.ti.com/energy
Clocks and Timers	www.ti.com/clocks	Industrial	www.ti.com/industrial
Interface	interface.ti.com	Medical	www.ti.com/medical
Logic	logic.ti.com	Security	www.ti.com/security
Power Mgmt	power.ti.com	Space, Avionics and Defense	www.ti.com/space-avionics-defense
Microcontrollers	microcontroller.ti.com	Video and Imaging	www.ti.com/video
RFID	www.ti-rfid.com		
OMAP Applications Processors	www.ti.com/omap	**TI E2E Community**	e2e.ti.com
Wireless Connectivity	www.ti.com/wirelessconnectivity		

Mailing Address: Texas Instruments, Post Office Box 655303, Dallas, Texas 75265
Copyright © 2016, Texas Instruments Incorporated