LM35 Precision Centigrade Temperature Sensors

1 Features

- Calibrated Directly in Celsius (Centigrade)
- Linear + 10-mV/°C Scale Factor
- 0.5°C Ensured Accuracy (at 25°C)
- Rated for Full −55°C to 150°C Range
- Suitable for Remote Applications
- Low-Cost Due to Wafer-Level Trimming
- Operates from 4 V to 30 V
- Less than 60-μA Current Drain
- Low Self-Heating, 0.08°C in Still Air
- Non-Linearity Only ±¼°C Typical
- Low-Impedance Output, 0.1 Ω for 1-mA Load

2 Applications

- Power Supplies
- Battery Management
- HVAC
- Appliances

3 Description

The LM35 series are precision integrated-circuit temperature devices with an output voltage linearly-proportional to the Centigrade temperature. The LM35 device has an advantage over linear temperature sensors calibrated in Kelvin, as the user is not required to subtract a large constant voltage from the output to obtain convenient Centigrade scaling. The LM35 device does not require any external calibration or trimming to provide typical accuracies of ±¼°C at room temperature and ±¾°C over a full −55°C to 150°C temperature range. Lower cost is assured by trimming and calibration at the wafer level. The low-output impedance, linear output, and precise inherent calibration of the LM35 device makes interfacing to readout or control circuitry especially easy. The device is used with single power supplies, or with plus and minus supplies. As the LM35 device draws only 60 μA from the supply, it has very low self-heating of less than 0.1°C in still air. The LM35 device is rated to operate over a −55°C to 150°C temperature range, while the LM35C device is rated for a −40°C to 110°C range (−10° with improved accuracy). The LM35-series devices are available packaged in hermetic TO transistor packages, while the LM35C, LM35CA, and LM35D devices are available in the plastic TO-92 transistor package. The LM35D device is available in an 8-lead surface-mount small-outline package and a plastic TO-220 package.

Device Information(1)

PART NUMBER	PACKAGE	BODY SIZE (NOM)
LM35	TO-CAN (3)	4.699 mm × 4.699 mm
	TO-92 (3)	4.30 mm × 4.30 mm
	SOIC (8)	4.90 mm × 3.91 mm
	TO-220 (3)	14.986 mm × 10.16 mm

(1) For all available packages, see the orderable addendum at the end of the datasheet.

Basic Centigrade Temperature Sensor (2°C to 150°C)

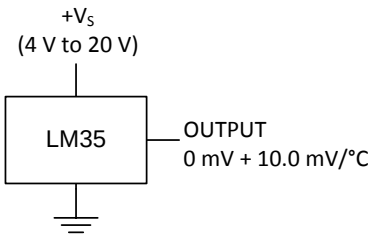

Full-Range Centigrade Temperature Sensor

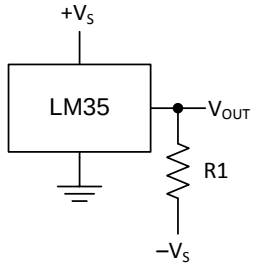

Choose $R_1 = -V_S / 50\ \mu A$
V_{OUT} = 1500 mV at 150°C
V_{OUT} = 250 mV at 25°C
V_{OUT} = –550 mV at –55°C

An IMPORTANT NOTICE at the end of this data sheet addresses availability, warranty, changes, use in safety-critical applications, intellectual property matters and other important disclaimers. PRODUCTION DATA.

Table of Contents

1 **Features** ... 1
2 **Applications** ... 1
3 **Description** ... 1
4 **Revision History** ... 2
5 **Pin Configuration and Functions** ... 3
6 **Specifications** ... 4
6.1 Absolute Maximum Ratings ... 4
6.2 ESD Ratings ... 4
6.3 Recommended Operating Conditions ... 4
6.4 Thermal Information ... 4
6.5 Electrical Characteristics: LM35A, LM35CA Limits ... 5
6.6 Electrical Characteristics: LM35A, LM35CA ... 6
6.7 Electrical Characteristics: LM35, LM35C, LM35D Limits ... 8
6.8 Electrical Characteristics: LM35, LM35C, LM35D ... 9
6.9 Typical Characteristics ... 11
7 **Detailed Description** ... 13
7.1 Overview ... 13
7.2 Functional Block Diagram ... 13
7.3 Feature Description ... 13
7.4 Device Functional Modes ... 13
8 **Application and Implementation** ... 14
8.1 Application Information ... 14
8.2 Typical Application ... 15
8.3 System Examples ... 16
9 **Power Supply Recommendations** ... 19
10 **Layout** ... 19
10.1 Layout Guidelines ... 19
10.2 Layout Example ... 20
11 **Device and Documentation Support** ... 21
11.1 Receiving Notification of Documentation Updates 21
11.2 Community Resources ... 21
11.3 Trademarks ... 21
11.4 Electrostatic Discharge Caution ... 21
11.5 Glossary ... 21
12 **Mechanical, Packaging, and Orderable Information** ... 21

4 Revision History

Changes from Revision F (January 2016) to Revision G — **Page**

- Equation 1, changed From: 10 mV/°F To: 10mv/°C ... 13
- *Power Supply Recommendations*, changed From: "4-V to 5.5-V power supply" To: "4-V to 30-V power supply: ... 19

Changes from Revision E (January 2015) to Revision F — **Page**

- Changed NDV Package (TO-CAN) pinout from Top View to Bottom View ... 3

Changes from Revision D (October 2013) to Revision E — **Page**

- Added *Pin Configuration and Functions* section, *ESD Ratings* table, *Feature Description* section, *Device Functional Modes*, *Application and Implementation* section, *Power Supply Recommendations* section, *Layout* section, *Device and Documentation Support* section, and *Mechanical, Packaging, and Orderable Information* section ... 1

Changes from Revision C (July 2013) to Revision D — **Page**

- Changed *W* to Ω ... 1
- Changed *W* to Ω in *Abs Max* tablenote. ... 4

Copyright © 1999–2016, Texas Instruments Incorporated

5 Pin Configuration and Functions

NDV Package
3-Pin TO-CAN
(Bottom View)

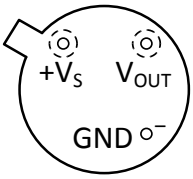

Case is connected to negative pin (GND)

D Package
8-PIN SOIC
(Top View)

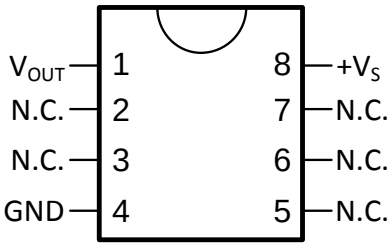

N.C. = No connection

NEB Package
3-Pin TO-220
(Top View)

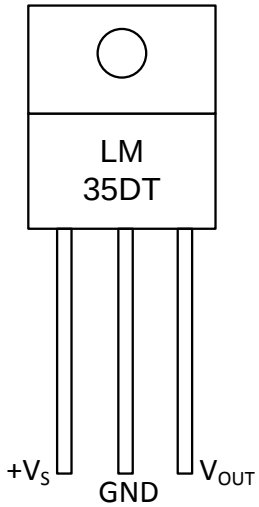

Tab is connected to the negative pin (GND).

NOTE: The LM35DT pinout is different than the discontinued LM35DP

LP Package
3-Pin TO-92
(Bottom View)

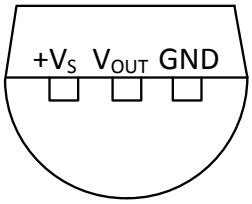

Pin Functions

PIN					TYPE	DESCRIPTION
NAME	TO46	TO92	TO220	SO8		
V_{OUT}	—	—	—	1	O	Temperature Sensor Analog Output
N.C.	—	—	—	2	—	No Connection
	—	—	—	3		
GND	—	—	—	4	GROUND	Device ground pin, connect to power supply negative terminal
N.C.	—	—	—	5	—	No Connection
	—	—	—	6		
	—	—	—	7		
$+V_S$	—	—	—	8	POWER	Positive power supply pin

6 Specifications

6.1 Absolute Maximum Ratings

over operating free-air temperature range (unless otherwise noted)[1][2]

		MIN	MAX	UNIT
Supply voltage		–0.2	35	V
Output voltage		–1	6	V
Output current			10	mA
Maximum Junction Temperature, $T_J$max			150	°C
Storage Temperature, T_{stg}	TO-CAN, TO-92 Package	–60	150	°C
	TO-220, SOIC Package	–65	150	

(1) If Military/Aerospace specified devices are required, please contact the Texas Instruments Sales Office/ Distributors for availability and specifications.
(2) Absolute Maximum Ratings indicate limits beyond which damage to the device may occur. DC and AC electrical specifications do not apply when operating the device beyond its rated operating conditions.

6.2 ESD Ratings

		VALUE	UNIT
$V_{(ESD)}$ Electrostatic discharge	Human-body model (HBM), per ANSI/ESDA/JEDEC JS-001[1]	±2500	V

(1) JEDEC document JEP155 states that 500-V HBM allows safe manufacturing with a standard ESD control process.

6.3 Recommended Operating Conditions

over operating free-air temperature range (unless otherwise noted)

		MIN	MAX	UNIT
Specified operating temperature: T_{MIN} to T_{MAX}	LM35, LM35A	–55	150	°C
	LM35C, LM35CA	–40	110	
	LM35D	0	100	
Supply Voltage (+V_S)		4	30	V

6.4 Thermal Information

THERMAL METRIC[1][2]		LM35				UNIT
		NDV	LP	D	NEB	
		3 PINS		8 PINS	3 PINS	
$R_{\theta JA}$	Junction-to-ambient thermal resistance	400	180	220	90	°C/W
$R_{\theta JC(top)}$	Junction-to-case (top) thermal resistance	24	—	—	—	

(1) For more information about traditional and new thermal metrics, see the *IC Package Thermal Metrics* application report, SPRA953.
(2) For additional thermal resistance information, see *Typical Application*.

Copyright © 1999–2016, Texas Instruments Incorporated

6.5 Electrical Characteristics: LM35A, LM35CA Limits

Unless otherwise noted, these specifications apply: −55°C ≤ T_J ≤ 150°C for the LM35 and LM35A; −40°C ≤ T_J ≤ 110°C for the LM35C and LM35CA; and 0°C ≤ T_J ≤ 100°C for the LM35D. V_S = 5 Vdc and I_{LOAD} = 50 μA, in the circuit of Full-Range Centigrade Temperature Sensor. These specifications also apply from 2°C to T_{MAX} in the circuit of Figure 14.

PARAMETER	TEST CONDITIONS	LM35A			LM35CA			UNIT
		TYP	TESTED LIMIT(1)	DESIGN LIMIT(2)	TYP	TESTED LIMIT(1)	DESIGN LIMIT(2)	
Accuracy(3)	T_A = 25°C	±0.2	±0.5		±0.2	±0.5		°C
	T_A = –10°C	±0.3			±0.3		±1	
	T_A = T_{MAX}	±0.4	±1		±0.4	±1		
	T_A = T_{MIN}	±0.4	±1		±0.4		±1.5	
Nonlinearity(4)	T_{MIN} ≤ T_A ≤ T_{MAX}, –40°C ≤ T_J ≤ 125°C	±0.18		±0.35	±0.15		±0.3	°C
Sensor gain (average slope)	T_{MIN} ≤ T_A ≤ T_{MAX}	10	9.9		10		9.9	mV/°C
	–40°C ≤ T_J ≤ 125°C	10	10.1		10		10.1	
Load regulation(5) 0 ≤ I_L ≤ 1 mA	T_A = 25°C	±0.4	±1		±0.4	±1		mV/mA
	T_{MIN} ≤ T_A ≤ T_{MAX}, –40°C ≤ T_J ≤ 125°C	±0.5		±3	±0.5		±3	
Line regulation(5)	T_A = 25°C	±0.01	±0.05		±0.01	±0.05		mV/V
	4 V ≤ V_S ≤ 30 V, –40°C ≤ T_J ≤ 125°C	±0.02		±0.1	±0.02		±0.1	
Quiescent current(6)	V_S = 5 V, 25°C	56	67		56	67		μA
	V_S = 5 V, –40°C ≤ T_J ≤ 125°C	105		131	91		114	
	V_S = 30 V, 25°C	56.2	68		56.2	68		
	V_S = 30 V, –40°C ≤ T_J ≤ 125°C	105.5		133	91.5		116	
Change of quiescent current(5)	4 V ≤ V_S ≤ 30 V, 25°C	0.2	1		0.2	1		μA
	4 V ≤ V_S ≤ 30 V, –40°C ≤ T_J ≤ 125°C	0.5		2	0.5		2	
Temperature coefficient of quiescent current	–40°C ≤ T_J ≤ 125°C	0.39		0.5	0.39		0.5	μA/°C
Minimum temperature for rate accuracy	In circuit of Figure 14, I_L = 0	1.5		2	1.5		2	°C
Long term stability	T_J = T_{MAX}, for 1000 hours	±0.08			±0.08			°C

(1) Tested Limits are ensured and 100% tested in production.
(2) Design Limits are ensured (but not 100% production tested) over the indicated temperature and supply voltage ranges. These limits are not used to calculate outgoing quality levels.
(3) Accuracy is defined as the error between the output voltage and 10 mv/°C times the case temperature of the device, at specified conditions of voltage, current, and temperature (expressed in °C).
(4) Non-linearity is defined as the deviation of the output-voltage-versus-temperature curve from the best-fit straight line, over the rated temperature range of the device.
(5) Regulation is measured at constant junction temperature, using pulse testing with a low duty cycle. Changes in output due to heating effects can be computed by multiplying the internal dissipation by the thermal resistance.
(6) Quiescent current is defined in the circuit of Figure 14.

Copyright © 1999–2016, Texas Instruments Incorporated

6.6 Electrical Characteristics: LM35A, LM35CA

Unless otherwise noted, these specifications apply: −55°C ≤ T_J ≤ 150°C for the LM35 and LM35A; −40°C ≤ T_J ≤ 110°C for the LM35C and LM35CA; and 0°C ≤ T_J ≤ 100°C for the LM35D. V_S = 5 Vdc and I_{LOAD} = 50 μA, in the circuit of Full-Range Centigrade Temperature Sensor. These specifications also apply from 2°C to T_{MAX} in the circuit of Figure 14.

PARAMETER	TEST CONDITIONS		LM35A			LM35CA			UNIT
			MIN	TYP	MAX	TYP	TYP	MAX	
Accuracy(1)	T_A = 25°C			±0.2			±0.2		°C
		Tested Limit(2)			±0.5			±0.5	
		Design Limit(3)							
	T_A = –10°C			±0.3			±0.3		
		Tested Limit(2)							
		Design Limit(3)						±1	
	T_A = T_{MAX}			±0.4			±0.4		
		Tested Limit(2)			±1			±1	
		Design Limit(3)							
	T_A = T_{MIN}			±0.4			±0.4		
		Tested Limit(2)			±1				
		Design Limit(3)						±1.5	
Nonlinearity(4)	T_{MIN} ≤ T_A ≤ T_{MAX}, –40°C ≤ T_J ≤ 125°C			±0.18			±0.15		°C
		Tested Limit(2)							
		Design Limit(3)			±0.35			±0.3	
Sensor gain (average slope)	T_{MIN} ≤ T_A ≤ T_{MAX}			10			10		mV/°C
		Tested Limit(2)			9.9				
		Design Limit(3)						9.9	
	–40°C ≤ T_J ≤ 125°C			10			10		
		Tested Limit(2)			10.1				
		Design Limit(3)						10.1	
Load regulation(5) 0 ≤ I_L ≤ 1 mA	T_A = 25°C			±0.4			±0.4		mV/mA
		Tested Limit(2)			±1			±1	
		Design Limit(3)							
	T_{MIN} ≤ T_A ≤ T_{MAX}, –40°C ≤ T_J ≤ 125°C			±0.5			±0.5		
		Tested Limit(2)							
		Design Limit(3)			±3			±3	
Line regulation(5)	T_A = 25°C			±0.01			±0.01		mV/V
		Tested Limit(2)			±0.05			±0.05	
		Design Limit(3)							
	4 V ≤ V_S ≤ 30 V, –40°C ≤ T_J ≤ 125°C			±0.02			±0.02		
		Tested Limit(2)							
		Design Limit(3)			±0.1			±0.1	

(1) Accuracy is defined as the error between the output voltage and 10 mv/°C times the case temperature of the device, at specified conditions of voltage, current, and temperature (expressed in °C).
(2) Tested Limits are ensured and 100% tested in production.
(3) Design Limits are ensured (but not 100% production tested) over the indicated temperature and supply voltage ranges. These limits are not used to calculate outgoing quality levels.
(4) Non-linearity is defined as the deviation of the output-voltage-versus-temperature curve from the best-fit straight line, over the rated temperature range of the device.
(5) Regulation is measured at constant junction temperature, using pulse testing with a low duty cycle. Changes in output due to heating effects can be computed by multiplying the internal dissipation by the thermal resistance.

Copyright © 1999–2016, Texas Instruments Incorporated

Electrical Characteristics: LM35A, LM35CA (continued)

Unless otherwise noted, these specifications apply: −55°C ≤ T_J ≤ 150°C for the LM35 and LM35A; −40°C ≤ T_J ≤ 110°C for the LM35C and LM35CA; and 0°C ≤ T_J ≤ 100°C for the LM35D. V_S = 5 Vdc and I_{LOAD} = 50 μA, in the circuit of Full-Range Centigrade Temperature Sensor. These specifications also apply from 2°C to T_{MAX} in the circuit of Figure 14.

PARAMETER	TEST CONDITIONS		LM35A			LM35CA			UNIT
			MIN	TYP	MAX	TYP	TYP	MAX	
Quiescent current(6)	V_S = 5 V, 25°C			56			56		μA
		Tested Limit(2)			67			67	
		Design Limit(3)							
	V_S = 5 V, –40°C ≤ T_J ≤ 125°C			105			91		
		Tested Limit(2)							
		Design Limit(3)			131			114	
	V_S = 30 V, 25°C			56.2			56.2		
		Tested Limit(2)			68			68	
		Design Limit(3)							
	V_S = 30 V, –40°C ≤ T_J ≤ 125°C			105.5			91.5		
		Tested Limit(2)							
		Design Limit(3)			133			116	
Change of quiescent current(5)	4 V ≤ V_S ≤ 30 V, 25°C			0.2			0.2		μA
		Tested Limit(2)			1			1	
		Design Limit(3)							
	4 V ≤ V_S ≤ 30 V, –40°C ≤ T_J ≤ 125°C			0.5			0.5		
		Tested Limit(2)							
		Design Limit(3)			2			2	
Temperature coefficient of quiescent current	–40°C ≤ T_J ≤ 125°C			0.39			0.39		μA/°C
		Tested Limit(2)							
		Design Limit(3)			0.5			0.5	
Minimum temperature for rate accuracy	In circuit of Figure 14, I_L = 0			1.5			1.5		°C
		Tested Limit(2)							
		Design Limit(3)			2			2	
Long term stability	T_J = T_{MAX}, for 1000 hours			±0.08			±0.08		°C

(6) Quiescent current is defined in the circuit of Figure 14.

6.7 Electrical Characteristics: LM35, LM35C, LM35D Limits

Unless otherwise noted, these specifications apply: −55°C ≤ T_J ≤ 150°C for the LM35 and LM35A; −40°C ≤ T_J ≤ 110°C for the LM35C and LM35CA; and 0°C ≤ T_J ≤ 100°C for the LM35D. V_S = 5 Vdc and I_{LOAD} = 50 μA, in the circuit of Full-Range Centigrade Temperature Sensor. These specifications also apply from 2°C to T_{MAX} in the circuit of Figure 14.

PARAMETER	TEST CONDITIONS	LM35			LM35C, LM35D			UNIT
		TYP	TESTED LIMIT(1)	DESIGN LIMIT(2)	TYP	TESTED LIMIT(1)	DESIGN LIMIT(2)	
Accuracy, LM35, LM35C(3)	T_A = 25°C	±0.4	±1		±0.4	±1		°C
	T_A = –10°C	±0.5			±0.5		±1.5	
	T_A = T_{MAX}	±0.8	±1.5		±0.8		±1.5	
	T_A = T_{MIN}	±0.8		±1.5	±0.8		±2	
Accuracy, LM35D(3)	T_A = 25°C				±0.6	±1.5		°C
	T_A = T_{MAX}				±0.9		±2	
	T_A = T_{MIN}				±0.9		±2	
Nonlinearity(4)	T_{MIN} ≤ T_A ≤ T_{MAX}, –40°C ≤ T_J ≤ 125°C	±0.3		±0.5	±0.2		±0.5	°C
Sensor gain (average slope)	T_{MIN} ≤ T_A ≤ T_{MAX}, –40°C ≤ T_J ≤ 125°C	10	9.8		10		9.8	mV/°C
		10	10.2		10		10.2	
Load regulation(5) 0 ≤ I_L ≤ 1 mA	T_A = 25°C	±0.4	±2		±0.4	±2		mV/mA
	T_{MIN} ≤ T_A ≤ T_{MAX}, –40°C ≤ T_J ≤ 125°C	±0.5		±5	±0.5		±5	
Line regulation(5)	T_A = 25°C	±0.01	±0.1		±0.01	±0.1		mV/V
	4 V ≤ V_S ≤ 30 V, –40°C ≤ T_J ≤ 125°C	±0.02		±0.2	±0.02		±0.2	
Quiescent current(6)	V_S = 5 V, 25°C	56	80		56	80		μA
	V_S = 5 V, –40°C ≤ T_J ≤ 125°C	105		158	91		138	
	V_S = 30 V, 25°C	56.2	82		56.2	82		
	V_S = 30 V, –40°C ≤ T_J ≤ 125°C	105.5		161	91.5		141	
Change of quiescent current(5)	4 V ≤ V_S ≤ 30 V, 25°C	0.2	2		0.2	2		μA
	4 V ≤ V_S ≤ 30 V, –40°C ≤ T_J ≤ 125°C	0.5		3	0.5		**3**	
Temperature coefficient of quiescent current	–40°C ≤ T_J ≤ 125°C	0.39		0.7	0.39		0.7	μA/°C
Minimum temperature for rate accuracy	In circuit of Figure 14, I_L = 0	1.5		2	1.5		2	°C
Long term stability	T_J = T_{MAX}, for 1000 hours	±0.08			±0.08			°C

(1) Tested Limits are ensured and 100% tested in production.
(2) Design Limits are ensured (but not 100% production tested) over the indicated temperature and supply voltage ranges. These limits are not used to calculate outgoing quality levels.
(3) Accuracy is defined as the error between the output voltage and 10 mv/°C times the case temperature of the device, at specified conditions of voltage, current, and temperature (expressed in °C).
(4) Non-linearity is defined as the deviation of the output-voltage-versus-temperature curve from the best-fit straight line, over the rated temperature range of the device.
(5) Regulation is measured at constant junction temperature, using pulse testing with a low duty cycle. Changes in output due to heating effects can be computed by multiplying the internal dissipation by the thermal resistance.
(6) Quiescent current is defined in the circuit of Figure 14.

Copyright © 1999–2016, Texas Instruments Incorporated

6.8 Electrical Characteristics: LM35, LM35C, LM35D

Unless otherwise noted, these specifications apply: −55°C ≤ T_J ≤ 150°C for the LM35 and LM35A; −40°C ≤ T_J ≤ 110°C for the LM35C and LM35CA; and 0°C ≤ T_J ≤ 100°C for the LM35D. V_S = 5 Vdc and I_{LOAD} = 50 μA, in the circuit of Full-Range Centigrade Temperature Sensor. These specifications also apply from 2°C to T_{MAX} in the circuit of Figure 14.

PARAMETER	TEST CONDITIONS		LM35			LM35C, LM35D			UNIT
			MIN	TYP	MAX	MIN	TYP	MAX	
Accuracy, LM35, LM35C(1)	T_A = 25°C			±0.4			±0.4		°C
		Tested Limit(2)			±1			±1	
		Design Limit(3)							
	T_A = –10°C			±0.5			±0.5		
		Tested Limit(2)							
		Design Limit(3)						±1.5	
	T_A = T_{MAX}			±0.8			±0.8		
		Tested Limit(2)			±1.5				
		Design Limit(3)						±1.5	
	T_A = T_{MIN}			±0.8			±0.8		
		Tested Limit(2)							
		Design Limit(3)			±1.5			±2	
Accuracy, LM35D(1)	T_A = 25°C						±0.6		°C
		Tested Limit(2)						±1.5	
		Design Limit(3)							
	T_A = T_{MAX}						±0.9		
		Tested Limit(2)							
		Design Limit(3)						±2	
	T_A = T_{MIN}						±0.9		
		Tested Limit(2)							
		Design Limit(3)						±2	
Nonlinearity(4)	T_{MIN} ≤ T_A ≤ T_{MAX}, –40°C ≤ T_J ≤ 125°C			±0.3			±0.2		°C
		Tested Limit(2)							
		Design Limit(3)			±0.5			±0.5	
Sensor gain (average slope)	T_{MIN} ≤ T_A ≤ T_{MAX}, –40°C ≤ T_J ≤ 125°C			10			10		mV/°C
		Tested Limit(2)			9.8				
		Design Limit(3)						9.8	
				10			10		
		Tested Limit(2)			10.2				
		Design Limit(3)						10.2	
Load regulation(5) 0 ≤ I_L ≤ 1 mA	T_A = 25°C			±0.4			±0.4		mV/mA
		Tested Limit(2)			±2			±2	
		Design Limit(3)							
	T_{MIN} ≤ T_A ≤ T_{MAX}, –40°C ≤ T_J ≤ 125°C			±0.5			±0.5		
		Tested Limit(2)							
		Design Limit(3)			±5			±5	

(1) Accuracy is defined as the error between the output voltage and 10 mv/°C times the case temperature of the device, at specified conditions of voltage, current, and temperature (expressed in °C).
(2) Tested Limits are ensured and 100% tested in production.
(3) Design Limits are ensured (but not 100% production tested) over the indicated temperature and supply voltage ranges. These limits are not used to calculate outgoing quality levels.
(4) Non-linearity is defined as the deviation of the output-voltage-versus-temperature curve from the best-fit straight line, over the rated temperature range of the device.
(5) Regulation is measured at constant junction temperature, using pulse testing with a low duty cycle. Changes in output due to heating effects can be computed by multiplying the internal dissipation by the thermal resistance.

Copyright © 1999–2016, Texas Instruments Incorporated

Electrical Characteristics: LM35, LM35C, LM35D (continued)

Unless otherwise noted, these specifications apply: −55°C ≤ T_J ≤ 150°C for the LM35 and LM35A; −40°C ≤ T_J ≤ 110°C for the LM35C and LM35CA; and 0°C ≤ T_J ≤ 100°C for the LM35D. V_S = 5 Vdc and I_{LOAD} = 50 μA, in the circuit of Full-Range Centigrade Temperature Sensor. These specifications also apply from 2°C to T_{MAX} in the circuit of Figure 14.

PARAMETER	TEST CONDITIONS		LM35			LM35C, LM35D			UNIT
			MIN	TYP	MAX	MIN	TYP	MAX	
Line regulation(5)	T_A = 25°C			±0.01			±0.01		mV/V
		Tested Limit(2)			±0.1				
		Design Limit(3)						±0.1	
	4 V ≤ V_S ≤ 30 V, –40°C ≤ T_J ≤ 125°C			±0.02			±0.02		
		Tested Limit(2)							
		Design Limit(3)			±0.2			±0.2	
Quiescent current(6)	V_S = 5 V, 25°C			56			56		μA
		Tested Limit(2)			80			80	
		Design Limit(3)							
	V_S = 5 V, –40°C ≤ T_J ≤ 125°C			105			91		
		Tested Limit(2)							
		Design Limit(3)			158			138	
	V_S = 30 V, 25°C			56.2			56.2		
		Tested Limit(2)			82			82	
		Design Limit(3)							
	V_S = 30 V, –40°C ≤ T_J ≤ 125°C			105.5			91.5		
		Tested Limit(2)							
		Design Limit(3)			161			141	
Change of quiescent current(5)	4 V ≤ V_S ≤ 30 V, 25°C			0.2			0.2		μA
		Tested Limit(2)						2	
		Design Limit(3)			2				
	4 V ≤ V_S ≤ 30 V, –40°C ≤ T_J ≤ 125°C			0.5			0.5		
		Tested Limit(2)							
		Design Limit(3)			3			3	
Temperature coefficient of quiescent current	–40°C ≤ T_J ≤ 125°C			0.39			0.39		μA/°C
		Tested Limit(2)							
		Design Limit(3)			0.7			0.7	
Minimum temperature for rate accuracy	In circuit of Figure 14, I_L = 0			1.5			1.5		°C
		Tested Limit(2)							
		Design Limit(3)			2			2	
Long term stability	T_J = T_{MAX}, for 1000 hours			±0.08			±0.08		°C

(6) Quiescent current is defined in the circuit of Figure 14.

Copyright © 1999–2016, Texas Instruments Incorporated

6.9 Typical Characteristics

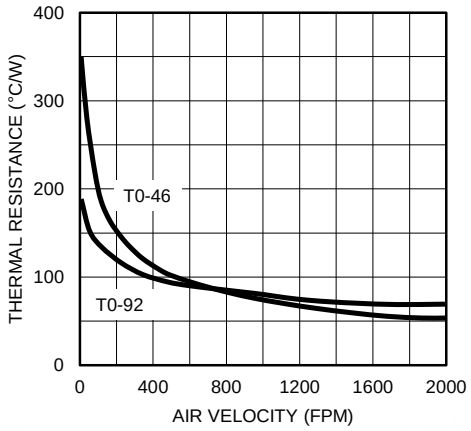

Figure 1. Thermal Resistance Junction To Air

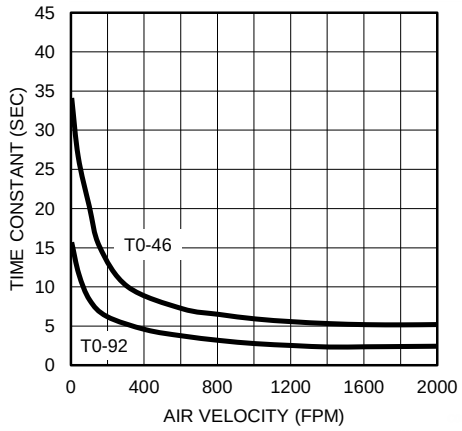

Figure 2. Thermal Time Constant

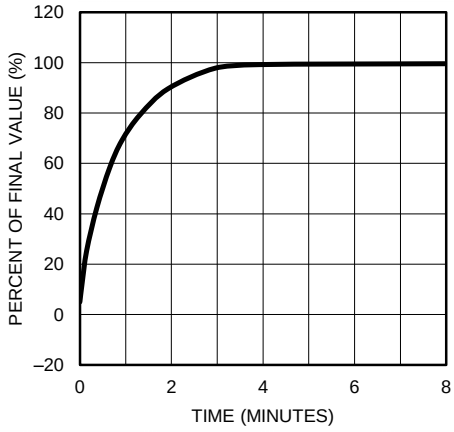

Figure 3. Thermal Response In Still Air

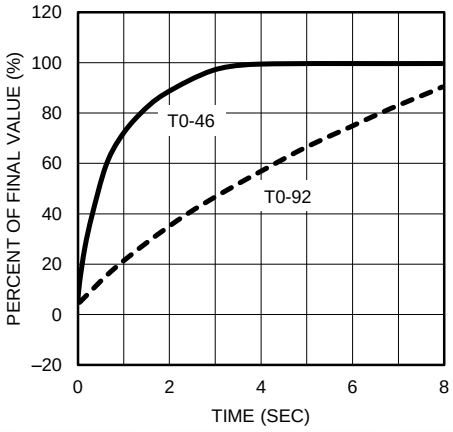

Figure 4. Thermal Response In Stirred Oil Bath

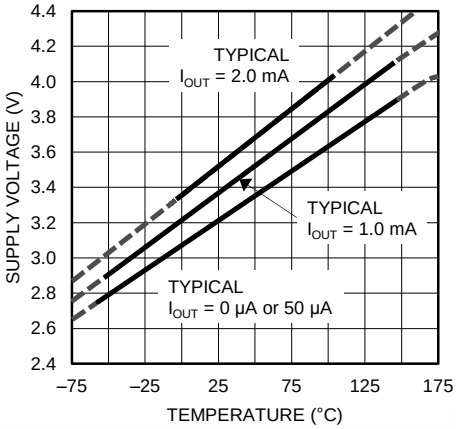

Figure 5. Minimum Supply Voltage vs Temperature

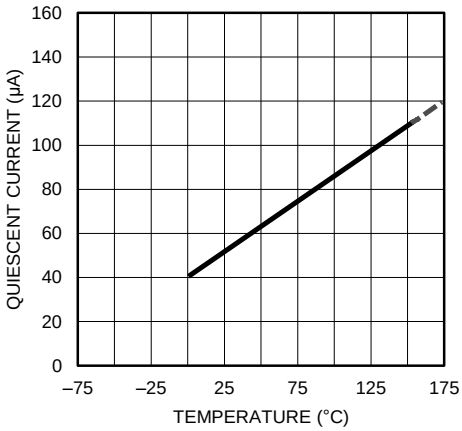

Figure 6. Quiescent Current vs Temperature (in Circuit of Figure 14)

Typical Characteristics (continued)

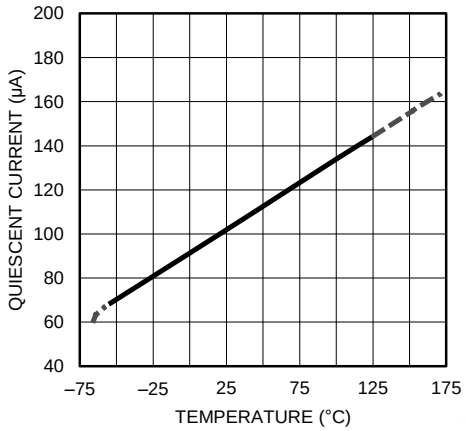

Figure 7. Quiescent Current vs Temperature (in Circuit of Full-Range Centigrade Temperature Sensor)

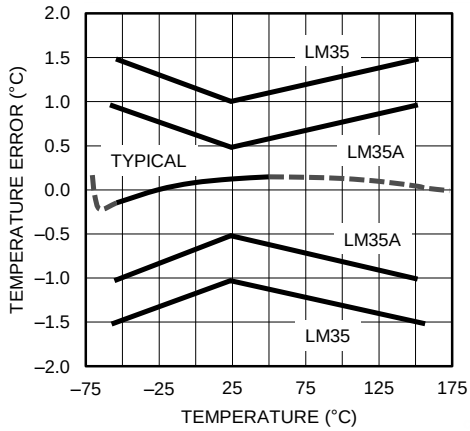

Figure 8. Accuracy vs Temperature (Ensured)

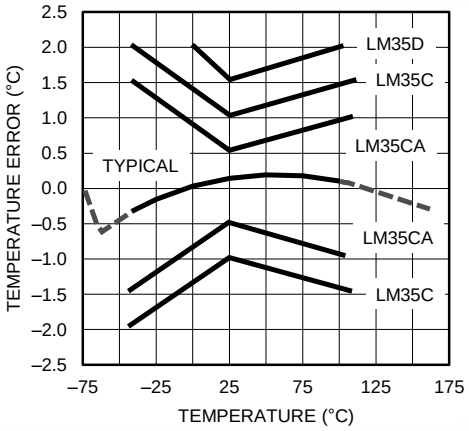

Figure 9. Accuracy vs Temperature (Ensured)

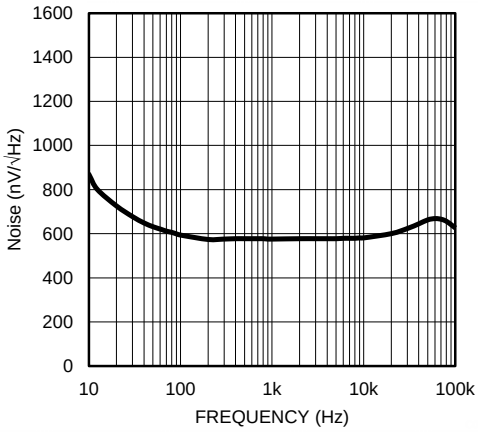

Figure 10. Noise Voltage

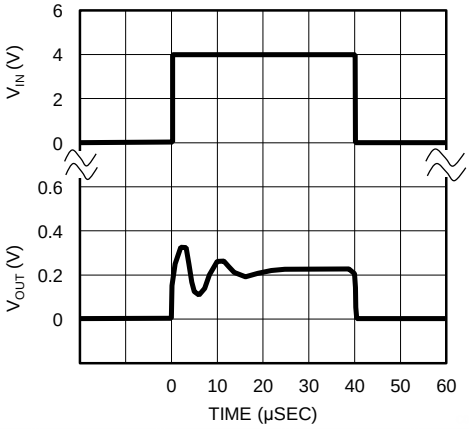

Figure 11. Start-Up Response

Copyright © 1999–2016, Texas Instruments Incorporated

7 Detailed Description

7.1 Overview

The LM35-series devices are precision integrated-circuit temperature sensors, with an output voltage linearly proportional to the Centigrade temperature. The LM35 device has an advantage over linear temperature sensors calibrated in Kelvin, as the user is not required to subtract a large constant voltage from the output to obtain convenient Centigrade scaling. The LM35 device does not require any external calibration or trimming to provide typical accuracies of ± ¼ °C at room temperature and ± ¾ °C over a full −55°C to 150°C temperature range. Lower cost is assured by trimming and calibration at the wafer level. The low output impedance, linear output, and precise inherent calibration of the LM35 device makes interfacing to readout or control circuitry especially easy. The device is used with single power supplies, or with plus and minus supplies. As the LM35 device draws only 60 μA from the supply, it has very low self-heating of less than 0.1°C in still air. The LM35 device is rated to operate over a −55°C to 150°C temperature range, while the LM35C device is rated for a −40°C to 110°C range (−10° with improved accuracy). The temperature-sensing element is comprised of a delta-V BE architecture.

The temperature-sensing element is then buffered by an amplifier and provided to the VOUT pin. The amplifier has a simple class A output stage with typical 0.5-Ω output impedance as shown in the *Functional Block Diagram*. Therefore the LM35 can only source current and it's sinking capability is limited to 1 μA.

7.2 Functional Block Diagram

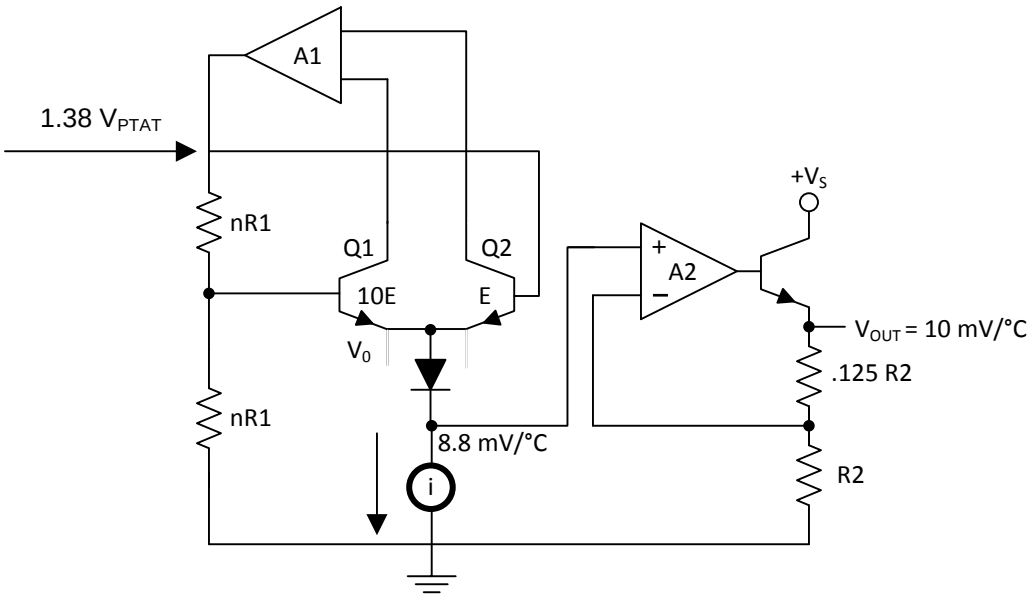

7.3 Feature Description

7.3.1 LM35 Transfer Function

The accuracy specifications of the LM35 are given with respect to a simple linear transfer function:

V_{OUT} = 10 mv/°C × T

where

- V_{OUT} is the LM35 output voltage
- T is the temperature in °C (1)

7.4 Device Functional Modes

The only functional mode of the LM35 is that it has an analog output directly proportional to temperature.

8 Application and Implementation

NOTE

Information in the following applications sections is not part of the TI component specification, and TI does not warrant its accuracy or completeness. TI's customers are responsible for determining suitability of components for their purposes. Customers should validate and test their design implementation to confirm system functionality.

8.1 Application Information

The features of the LM35 make it suitable for many general temperature sensing applications. Multiple package options expand on it's flexibility.

8.1.1 Capacitive Drive Capability

Like most micropower circuits, the LM35 device has a limited ability to drive heavy capacitive loads. Alone, the LM35 device is able to drive 50 pF without special precautions. If heavier loads are anticipated, isolating or decoupling the load with a resistor is easy (see Figure 12). The tolerance of capacitance can be improved with a series R-C damper from output to ground (see Figure 13).

When the LM35 device is applied with a 200-Ω load resistor as shown in Figure 16, Figure 17, or Figure 19, the device is relatively immune to wiring capacitance because the capacitance forms a bypass from ground to input and not on the output. However, as with any linear circuit connected to wires in a hostile environment, performance is affected adversely by intense electromagnetic sources (such as relays, radio transmitters, motors with arcing brushes, and SCR transients), because the wiring acts as a receiving antenna and the internal junctions act as rectifiers. For best results in such cases, a bypass capacitor from V_{IN} to ground and a series R-C damper, such as 75 Ω in series with 0.2 or 1 μF from output to ground, are often useful. Examples are shown in Figure 13, Figure 24, and Figure 25.

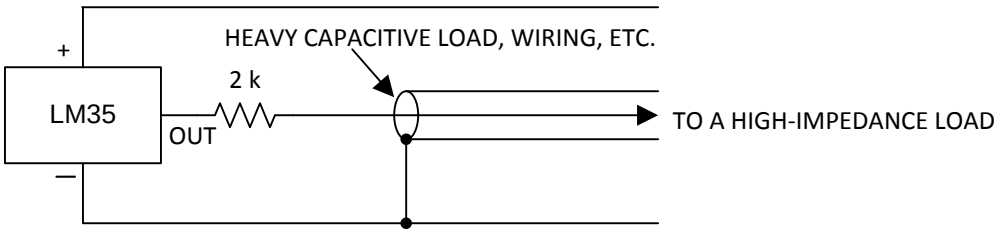

Figure 12. LM35 with Decoupling from Capacitive Load

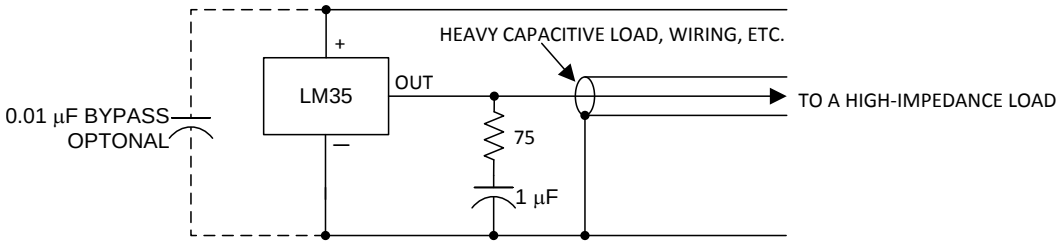

Figure 13. LM35 with R-C Damper

Copyright © 1999–2016, Texas Instruments Incorporated

8.2 Typical Application

8.2.1 Basic Centigrade Temperature Sensor

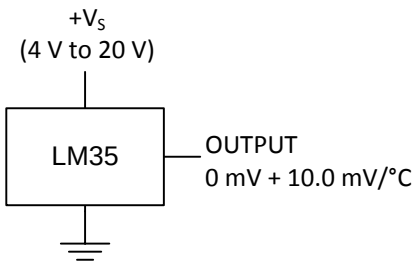

Figure 14. Basic Centigrade Temperature Sensor (2 °C to 150 °C)

8.2.1.1 Design Requirements

Table 1. Design Parameters

PARAMETER	VALUE
Accuracy at 25°C	±0.5°C
Accuracy from –55 °C to 150°C	±1°C
Temperature Slope	10 mV/°C

8.2.1.2 Detailed Design Procedure

Because the LM35 device is a simple temperature sensor that provides an analog output, design requirements related to layout are more important than electrical requirements. For a detailed description, refer to the *Layout*.

8.2.1.3 Application Curve

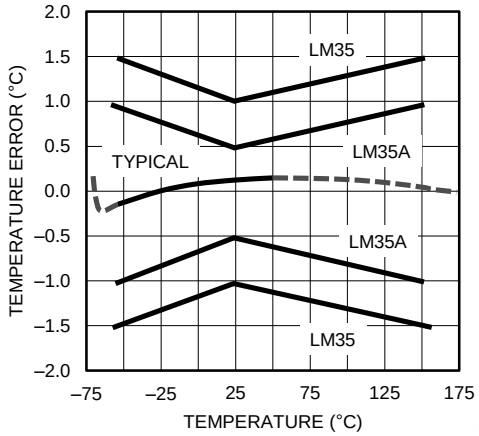

Figure 15. Accuracy vs Temperature (Ensured)

8.3 System Examples

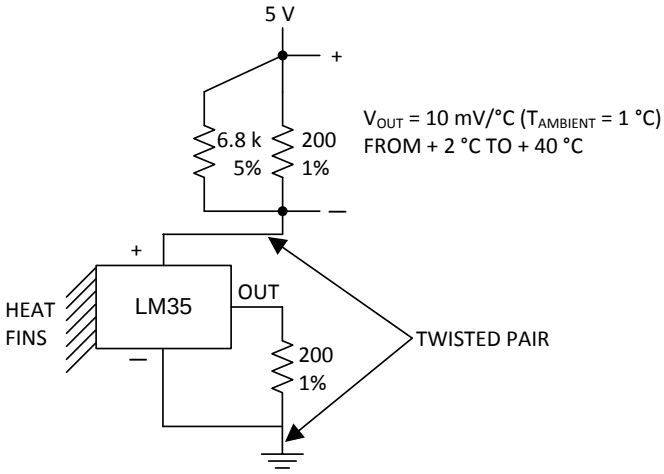

Figure 16. Two-Wire Remote Temperature Sensor (Grounded Sensor)

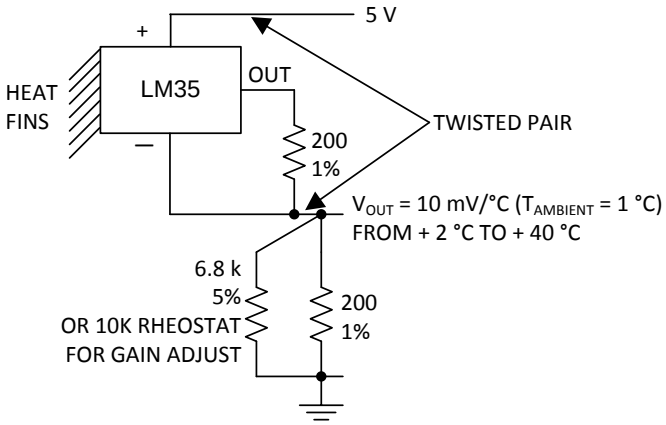

Figure 17. Two-Wire Remote Temperature Sensor (Output Referred to Ground)

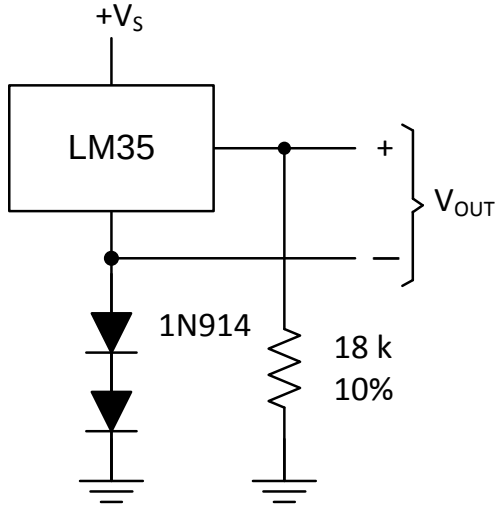

Figure 18. Temperature Sensor, Single Supply (−55° to +150°C)

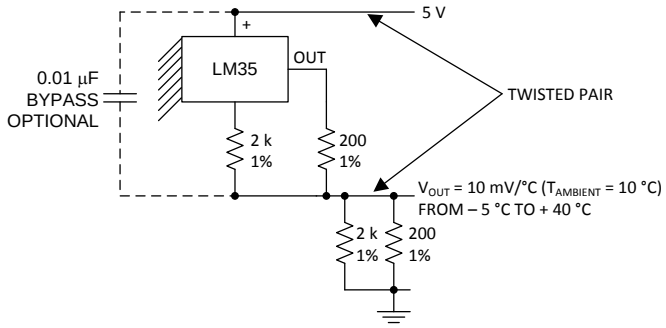

Figure 19. Two-Wire Remote Temperature Sensor (Output Referred to Ground)

Copyright © 1999–2016, Texas Instruments Incorporated

System Examples (continued)

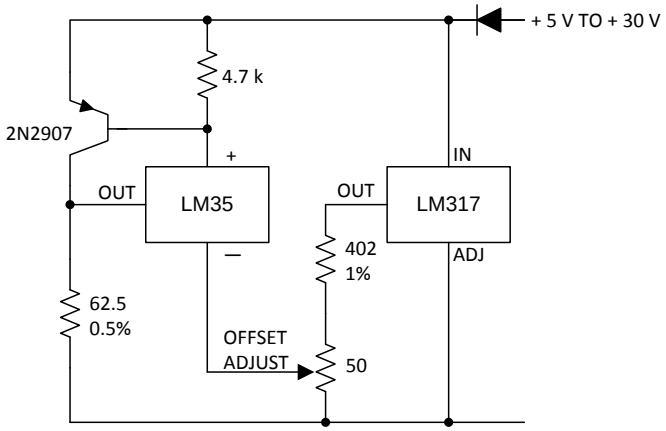

Figure 20. 4-To-20 mA Current Source (0°C to 100°C)

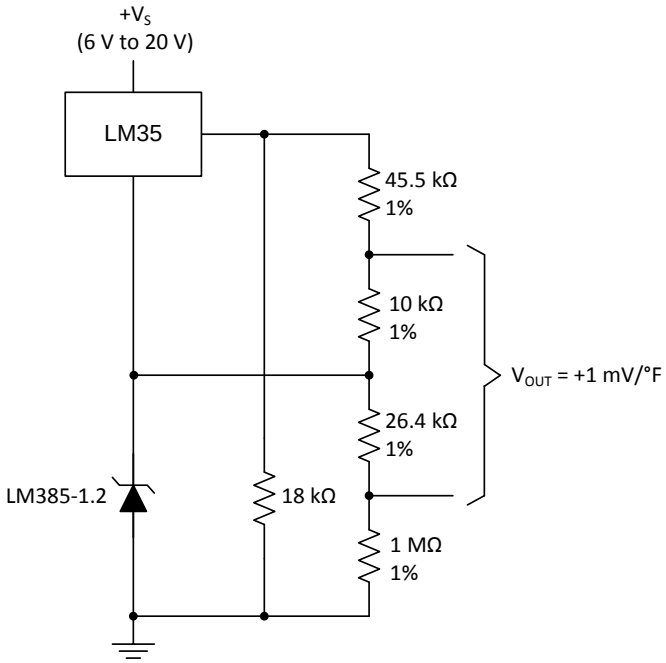

Figure 21. Fahrenheit Thermometer

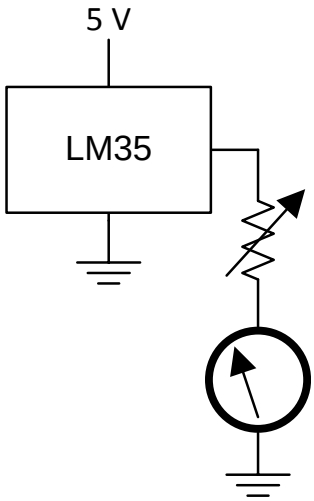

Figure 22. Centigrade Thermometer (Analog Meter)

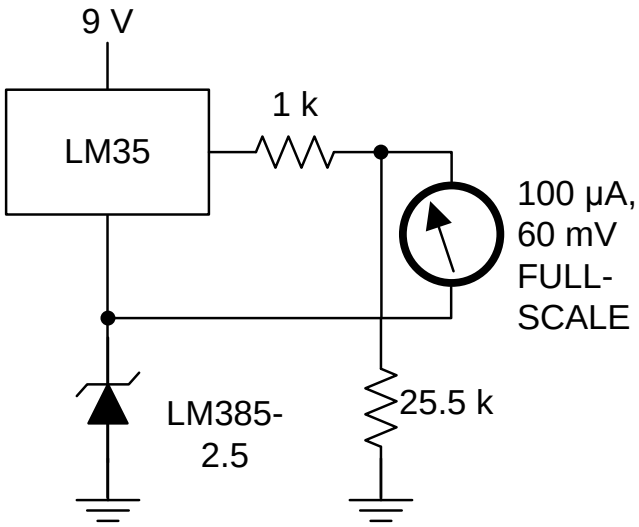

Figure 23. Fahrenheit Thermometer, Expanded Scale Thermometer (50°F to 80°F, for Example Shown)

System Examples (continued)

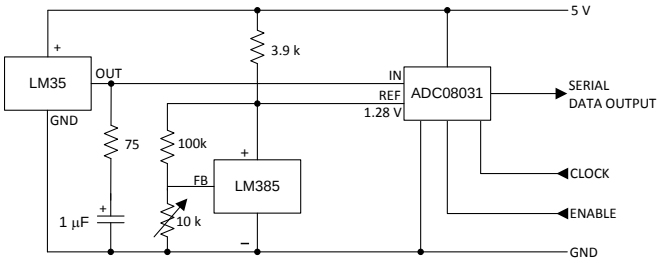

Figure 24. Temperature to Digital Converter (Serial Output) (128°C Full Scale)

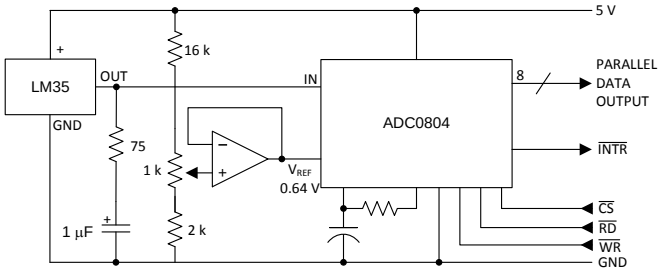

Figure 25. Temperature to Digital Converter (Parallel TRI-STATE Outputs for Standard Data Bus to µP Interface) (128°C Full Scale)

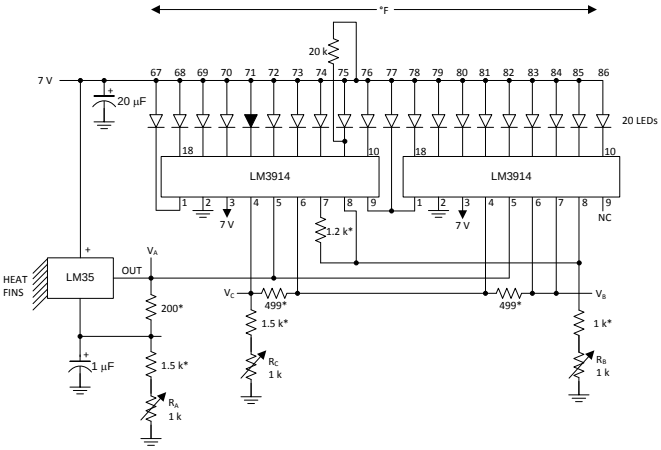

*=1% or 2% film resistor

Trim R_B for V_B = 3.075 V

Trim R_C for V_C = 1.955 V

Trim R_A for V_A = 0.075 V + 100 mV/°C ×$T_{ambient}$

Example, V_A = 2.275 V at 22°C

Figure 26. Bar-Graph Temperature Display (Dot Mode)

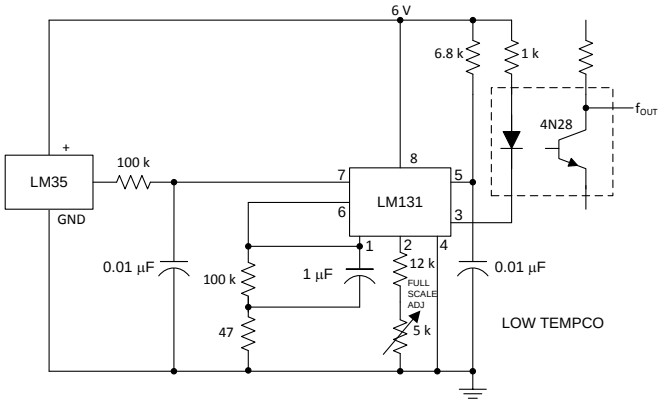

Figure 27. LM35 With Voltage-To-Frequency Converter and Isolated Output (2°C to 150°C; 20 to 1500 Hz)

Copyright © 1999–2016, Texas Instruments Incorporated

9 Power Supply Recommendations

The LM35 device has a very wide 4-V to 30-V power supply voltage range, which makes it ideal for many applications. In noisy environments, TI recommends adding a 0.1 μF from V+ to GND to bypass the power supply voltage. Larger capacitances maybe required and are dependent on the power-supply noise.

10 Layout

10.1 Layout Guidelines

The LM35 is easily applied in the same way as other integrated-circuit temperature sensors. Glue or cement the device to a surface and the temperature should be within about 0.01°C of the surface temperature.

The 0.01°C proximity presumes that the ambient air temperature is almost the same as the surface temperature. If the air temperature were much higher or lower than the surface temperature, the actual temperature of the LM35 die would be at an intermediate temperature between the surface temperature and the air temperature; this is especially true for the TO-92 plastic package. The copper leads in the TO-92 package are the principal thermal path to carry heat into the device, so its temperature might be closer to the air temperature than to the surface temperature.

Ensure that the wiring leaving the LM35 device is held at the same temperature as the surface of interest to minimize the temperature problem. The easiest fix is to cover up these wires with a bead of epoxy. The epoxy bead will ensure that the leads and wires are all at the same temperature as the surface, and that the temperature of the LM35 die is not affected by the air temperature.

The TO-46 metal package can also be soldered to a metal surface or pipe without damage. Of course, in that case the V− terminal of the circuit will be grounded to that metal. Alternatively, mount the LM35 inside a sealed-end metal tube, and then dip into a bath or screw into a threaded hole in a tank. As with any IC, the LM35 device and accompanying wiring and circuits must be kept insulated and dry, to avoid leakage and corrosion. This is especially true if the circuit may operate at cold temperatures where condensation can occur. Printed-circuit coatings and varnishes such as a conformal coating and epoxy paints or dips are often used to insure that moisture cannot corrode the LM35 device or its connections.

These devices are sometimes soldered to a small light-weight heat fin to decrease the thermal time constant and speed up the response in slowly-moving air. On the other hand, a small thermal mass may be added to the sensor, to give the steadiest reading despite small deviations in the air temperature.

Table 2. Temperature Rise of LM35 Due To Self-heating (Thermal Resistance, $R_{\theta JA}$)

	TO, no heat sink	TO(1), small heat fin	TO-92, no heat sink	TO-92(2), small heat fin	SOIC-8, no heat sink	SOIC-8(2), small heat fin	TO-220, no heat sink
Still air	400°C/W	100°C/W	180°C/W	140°C/W	220°C/W	110°C/W	90°C/W
Moving air	100°C/W	40°C/W	90°C/W	70°C/W	105°C/W	90°C/W	26°C/W
Still oil	100°C/W	40°C/W	90°C/W	70°C/W	—	—	—
Stirred oil	50°C/W	30°C/W	45°C/W	40°C/W	—	—	—
(Clamped to metal, Infinite heat sink)	(24°C/W)		—	—	(55°C/W)		—

(1) Wakefield type 201, or 1-in disc of 0.02-in sheet brass, soldered to case, or similar.
(2) TO-92 and SOIC-8 packages glued and leads soldered to 1-in square of 1/16-in printed circuit board with 2-oz foil or similar.

10.2 Layout Example

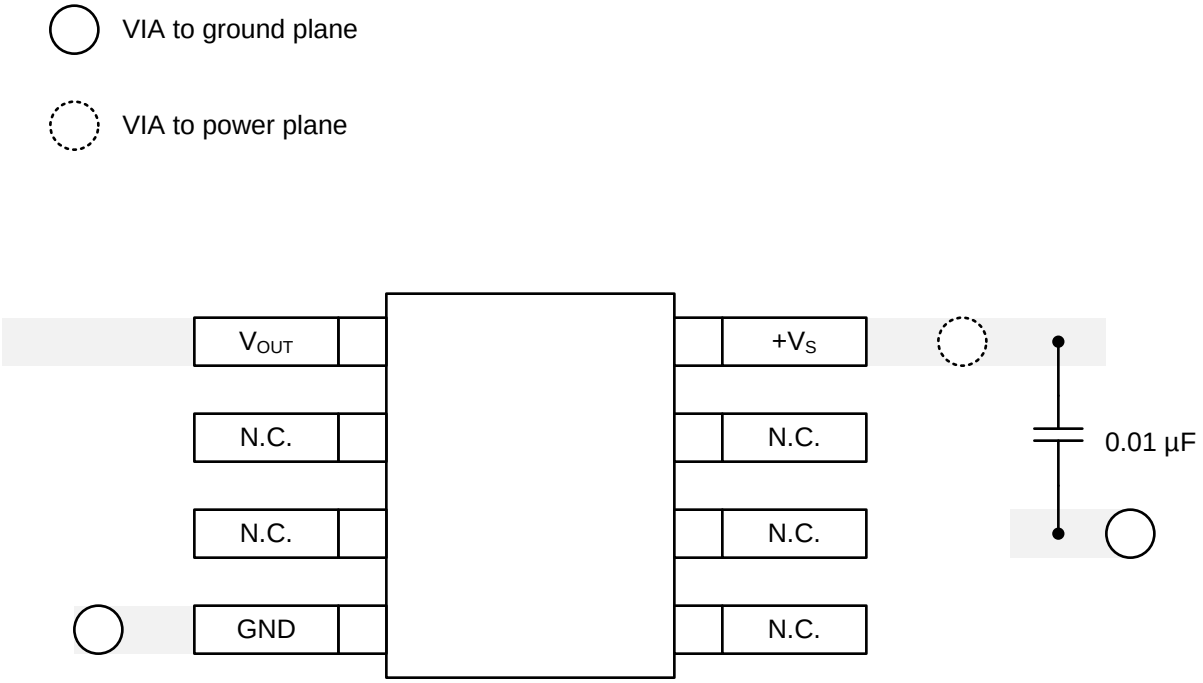

Figure 28. Layout Example

Copyright © 1999–2016, Texas Instruments Incorporated

11 Device and Documentation Support

11.1 Receiving Notification of Documentation Updates

To receive notification of documentation updates, navigate to the device product folder on ti.com. In the upper right corner, click on *Alert me* to register and receive a weekly digest of any product information that has changed. For change details, review the revision history included in any revised document

11.2 Community Resources

The following links connect to TI community resources. Linked contents are provided "AS IS" by the respective contributors. They do not constitute TI specifications and do not necessarily reflect TI's views; see TI's Terms of Use.

TI E2E™ Online Community ***TI's Engineer-to-Engineer (E2E) Community.*** Created to foster collaboration among engineers. At e2e.ti.com, you can ask questions, share knowledge, explore ideas and help solve problems with fellow engineers.

Design Support ***TI's Design Support*** Quickly find helpful E2E forums along with design support tools and contact information for technical support.

11.3 Trademarks

E2E is a trademark of Texas Instruments.
All other trademarks are the property of their respective owners.

11.4 Electrostatic Discharge Caution

These devices have limited built-in ESD protection. The leads should be shorted together or the device placed in conductive foam during storage or handling to prevent electrostatic damage to the MOS gates.

11.5 Glossary

SLYZ022 — *TI Glossary*.

This glossary lists and explains terms, acronyms, and definitions.

12 Mechanical, Packaging, and Orderable Information

The following pages include mechanical, packaging, and orderable information. This information is the most current data available for the designated devices. This data is subject to change without notice and revision of this document. For browser-based versions of this data sheet, refer to the left-hand navigation.

PACKAGING INFORMATION

Orderable Device	Status (1)	Package Type	Package Drawing	Pins	Package Qty	Eco Plan (2)	Lead/Ball Finish (6)	MSL Peak Temp (3)	Op Temp (°C)	Device Marking (4/5)	Samples
LM35AH	ACTIVE	TO	NDV	3	500	TBD	Call TI	Call TI	-55 to 150	(LM35AH ~ LM35AH)	Samples
LM35AH/NOPB	ACTIVE	TO	NDV	3	500	Green (RoHS & no Sb/Br)	Call TI	Level-1-NA-UNLIM	-55 to 150	(LM35AH ~ LM35AH)	Samples
LM35CAH	ACTIVE	TO	NDV	3	500	TBD	Call TI	Call TI	-40 to 110	(LM35CAH ~ LM35CAH)	Samples
LM35CAH/NOPB	ACTIVE	TO	NDV	3	500	Green (RoHS & no Sb/Br)	Call TI	Level-1-NA-UNLIM	-40 to 110	(LM35CAH ~ LM35CAH)	Samples
LM35CAZ/LFT4	ACTIVE	TO-92	LP	3	2000	Green (RoHS & no Sb/Br)	CU SN	N / A for Pkg Type		LM35 CAZ	Samples
LM35CAZ/NOPB	ACTIVE	TO-92	LP	3	1800	Green (RoHS & no Sb/Br)	CU SN	N / A for Pkg Type	-40 to 110	LM35 CAZ	Samples
LM35CH	ACTIVE	TO	NDV	3	500	TBD	Call TI	Call TI	-40 to 110	(LM35CH ~ LM35CH)	Samples
LM35CH/NOPB	ACTIVE	TO	NDV	3	500	Green (RoHS & no Sb/Br)	Call TI	Level-1-NA-UNLIM	-40 to 110	(LM35CH ~ LM35CH)	Samples
LM35CZ/LFT1	ACTIVE	TO-92	LP	3	2000	Green (RoHS & no Sb/Br)	CU SN	N / A for Pkg Type		LM35 CZ	Samples
LM35CZ/NOPB	ACTIVE	TO-92	LP	3	1800	Green (RoHS & no Sb/Br)	CU SN	N / A for Pkg Type	-40 to 110	LM35 CZ	Samples
LM35DH	ACTIVE	TO	NDV	3	1000	TBD	Call TI	Call TI	0 to 70	(LM35DH ~ LM35DH)	Samples
LM35DH/NOPB	ACTIVE	TO	NDV	3	1000	Green (RoHS & no Sb/Br)	Call TI | POST-PLATE	Level-1-NA-UNLIM	0 to 70	(LM35DH ~ LM35DH)	Samples
LM35DM	NRND	SOIC	D	8	95	TBD	Call TI	Call TI	0 to 100	LM35D M	
LM35DM/NOPB	ACTIVE	SOIC	D	8	95	Green (RoHS & no Sb/Br)	CU SN	Level-1-260C-UNLIM	0 to 100	LM35D M	Samples
LM35DMX	NRND	SOIC	D	8	2500	TBD	Call TI	Call TI	0 to 100	LM35D M	
LM35DMX/NOPB	ACTIVE	SOIC	D	8	2500	Green (RoHS & no Sb/Br)	CU SN	Level-1-260C-UNLIM	0 to 100	LM35D M	Samples
LM35DT	NRND	TO-220	NEB	3	45	TBD	Call TI	Call TI	0 to 100	LM35DT	
LM35DT/NOPB	ACTIVE	TO-220	NEB	3	45	Green (RoHS & no Sb/Br)	CU SN	Level-1-NA-UNLIM	0 to 100	LM35DT	Samples

Orderable Device	Status (1)	Package Type	Package Drawing	Pins	Package Qty	Eco Plan (2)	Lead/Ball Finish (6)	MSL Peak Temp (3)	Op Temp (°C)	Device Marking (4/5)	Samples
LM35DZ	OBSOLETE	TO-92	LP	3		TBD	Call TI	Call TI			
LM35DZ/LFT1	ACTIVE	TO-92	LP	3	2000	Green (RoHS & no Sb/Br)	CU SN	N / A for Pkg Type		LM35 DZ	Samples
LM35DZ/LFT4	ACTIVE	TO-92	LP	3	2000	Green (RoHS & no Sb/Br)	CU SN	N / A for Pkg Type		LM35 DZ	Samples
LM35DZ/NOPB	ACTIVE	TO-92	LP	3	1800	Green (RoHS & no Sb/Br)	CU SN	N / A for Pkg Type	0 to 100	LM35 DZ	Samples
LM35H	ACTIVE	TO	NDV	3	500	TBD	Call TI	Call TI	-55 to 150	(LM35H ~ LM35H)	Samples
LM35H/NOPB	ACTIVE	TO	NDV	3	500	Green (RoHS & no Sb/Br)	Call TI	Level-1-NA-UNLIM	-55 to 150	(LM35H ~ LM35H)	Samples

(1) The marketing status values are defined as follows:
ACTIVE: Product device recommended for new designs.
LIFEBUY: TI has announced that the device will be discontinued, and a lifetime-buy period is in effect.
NRND: Not recommended for new designs. Device is in production to support existing customers, but TI does not recommend using this part in a new design.
PREVIEW: Device has been announced but is not in production. Samples may or may not be available.
OBSOLETE: TI has discontinued the production of the device.

(2) Eco Plan - The planned eco-friendly classification: Pb-Free (RoHS), Pb-Free (RoHS Exempt), or Green (RoHS & no Sb/Br) - please check http://www.ti.com/productcontent for the latest availability information and additional product content details.
TBD: The Pb-Free/Green conversion plan has not been defined.
Pb-Free (RoHS): TI's terms "Lead-Free" or "Pb-Free" mean semiconductor products that are compatible with the current RoHS requirements for all 6 substances, including the requirement that lead not exceed 0.1% by weight in homogeneous materials. Where designed to be soldered at high temperatures, TI Pb-Free products are suitable for use in specified lead-free processes.
Pb-Free (RoHS Exempt): This component has a RoHS exemption for either 1) lead-based flip-chip solder bumps used between the die and package, or 2) lead-based die adhesive used between the die and leadframe. The component is otherwise considered Pb-Free (RoHS compatible) as defined above.
Green (RoHS & no Sb/Br): TI defines "Green" to mean Pb-Free (RoHS compatible), and free of Bromine (Br) and Antimony (Sb) based flame retardants (Br or Sb do not exceed 0.1% by weight in homogeneous material)

(3) MSL, Peak Temp. - The Moisture Sensitivity Level rating according to the JEDEC industry standard classifications, and peak solder temperature.

(4) There may be additional marking, which relates to the logo, the lot trace code information, or the environmental category on the device.

(5) Multiple Device Markings will be inside parentheses. Only one Device Marking contained in parentheses and separated by a "~" will appear on a device. If a line is indented then it is a continuation of the previous line and the two combined represent the entire Device Marking for that device.

(6) Lead/Ball Finish - Orderable Devices may have multiple material finish options. Finish options are separated by a vertical ruled line. Lead/Ball Finish values may wrap to two lines if the finish value exceeds the maximum column width.

Important Information and Disclaimer: The information provided on this page represents TI's knowledge and belief as of the date that it is provided. TI bases its knowledge and belief on information provided by third parties, and makes no representation or warranty as to the accuracy of such information. Efforts are underway to better integrate information from third parties. TI has taken and continues to take reasonable steps to provide representative and accurate information but may not have conducted destructive testing or chemical analysis on incoming materials and chemicals. TI and TI suppliers consider certain information to be proprietary, and thus CAS numbers and other limited information may not be available for release.

In no event shall TI's liability arising out of such information exceed the total purchase price of the TI part(s) at issue in this document sold by TI to Customer on an annual basis.

TAPE AND REEL INFORMATION

REEL DIMENSIONS

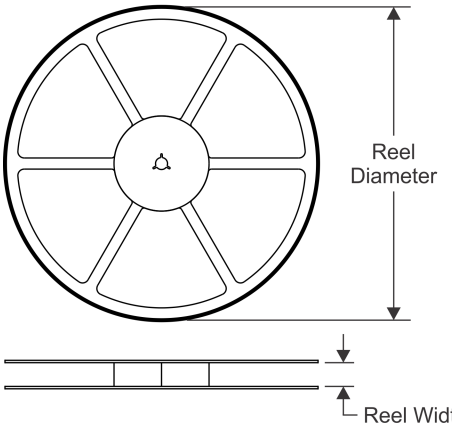

TAPE DIMENSIONS

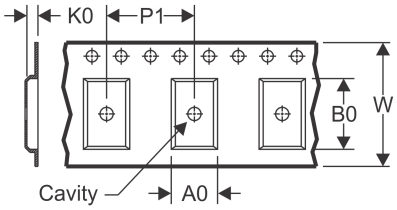

A0	Dimension designed to accommodate the component width
B0	Dimension designed to accommodate the component length
K0	Dimension designed to accommodate the component thickness
W	Overall width of the carrier tape
P1	Pitch between successive cavity centers

QUADRANT ASSIGNMENTS FOR PIN 1 ORIENTATION IN TAPE

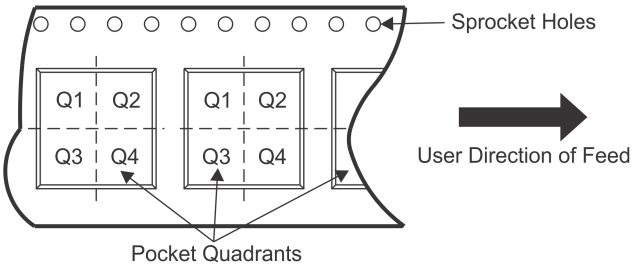

*All dimensions are nominal

Device	Package Type	Package Drawing	Pins	SPQ	Reel Diameter (mm)	Reel Width W1 (mm)	A0 (mm)	B0 (mm)	K0 (mm)	P1 (mm)	W (mm)	Pin1 Quadrant
LM35DMX	SOIC	D	8	2500	330.0	12.4	6.5	5.4	2.0	8.0	12.0	Q1
LM35DMX/NOPB	SOIC	D	8	2500	330.0	12.4	6.5	5.4	2.0	8.0	12.0	Q1

TAPE AND REEL BOX DIMENSIONS

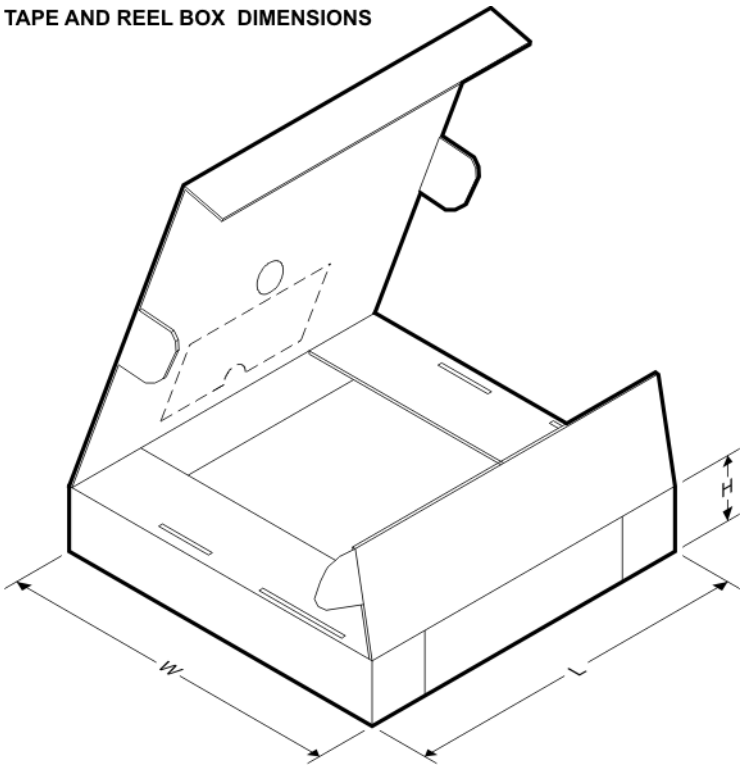

*All dimensions are nominal

Device	Package Type	Package Drawing	Pins	SPQ	Length (mm)	Width (mm)	Height (mm)
LM35DMX	SOIC	D	8	2500	367.0	367.0	35.0
LM35DMX/NOPB	SOIC	D	8	2500	367.0	367.0	35.0

NDV0003H

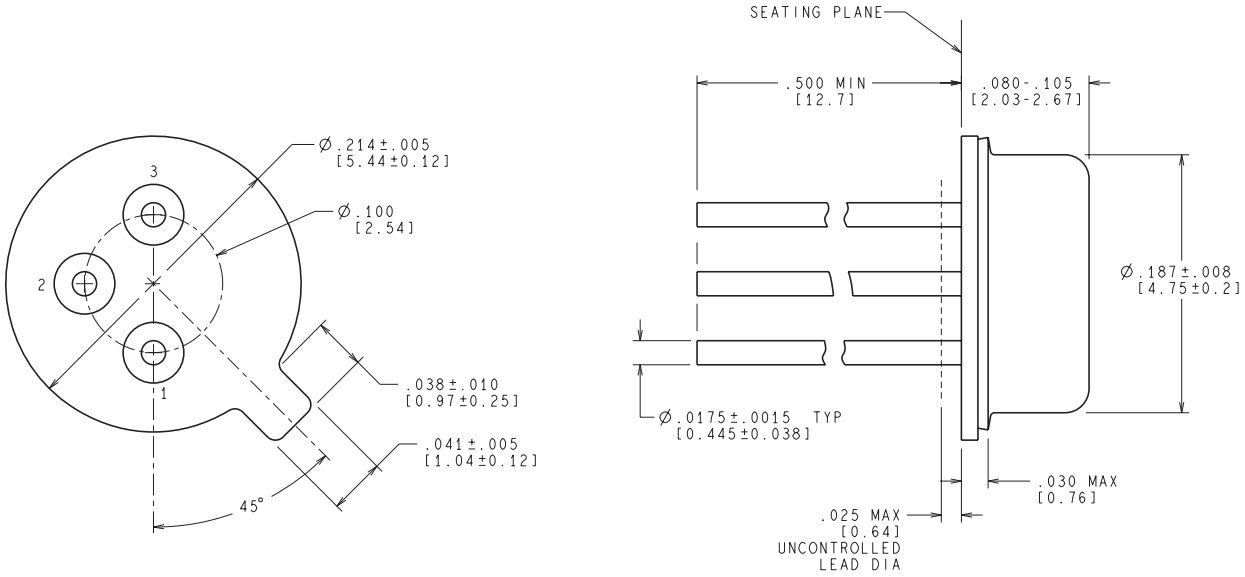

CONTROLLING DIMENSION IS INCH
VALUES IN [ ] ARE IN MILLIMETERS

H03H (Rev F)

D (R–PDSO–G8) PLASTIC SMALL OUTLINE

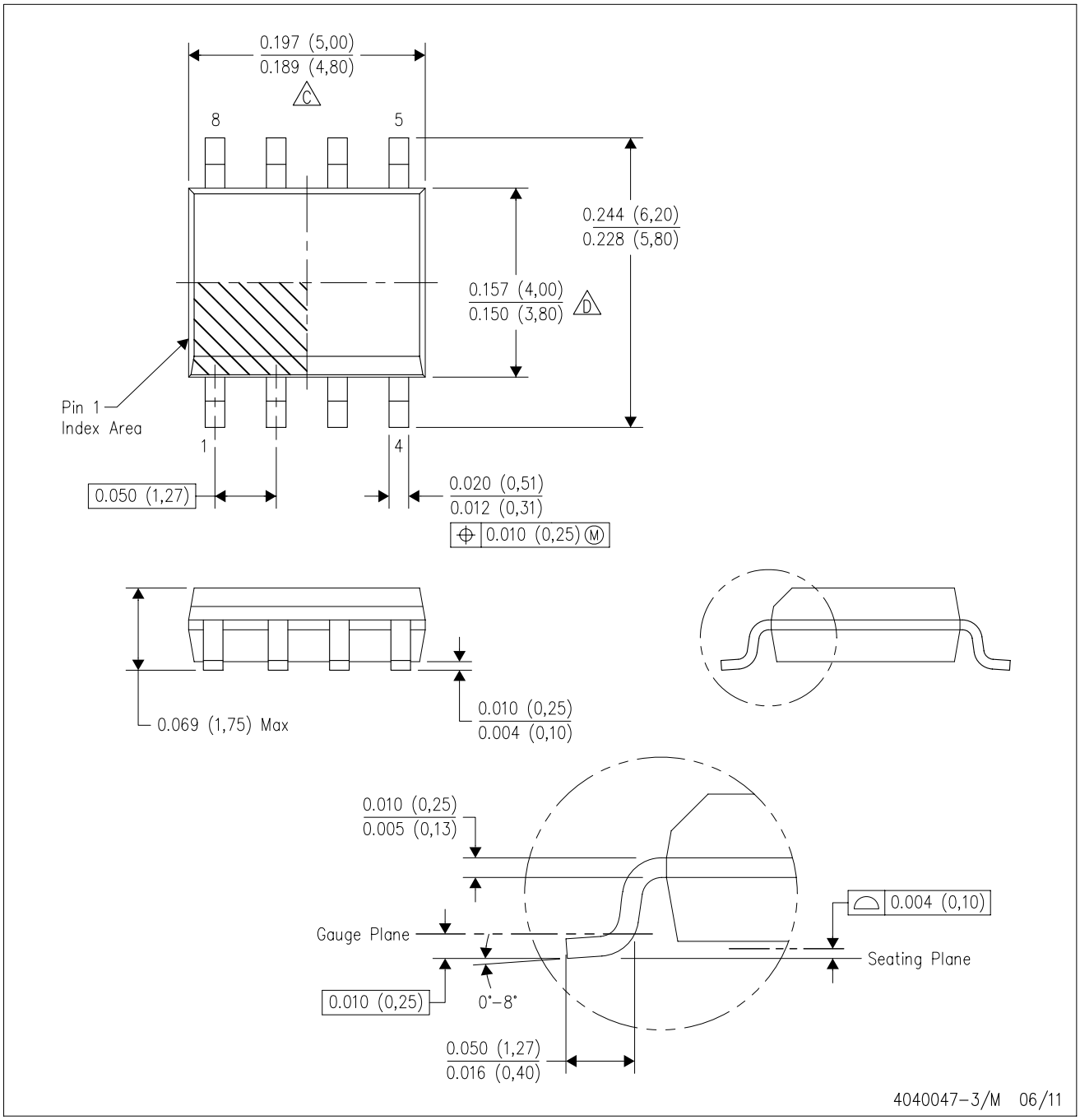

NOTES:
A. All linear dimensions are in inches (millimeters).
B. This drawing is subject to change without notice.
C. Body length does not include mold flash, protrusions, or gate burrs. Mold flash, protrusions, or gate burrs shall not exceed 0.006 (0,15) each side.
D. Body width does not include interlead flash. Interlead flash shall not exceed 0.017 (0,43) each side.
E. Reference JEDEC MS–012 variation AA.

LP (O–PBCY–W3) PLASTIC CYLINDRICAL PACKAGE

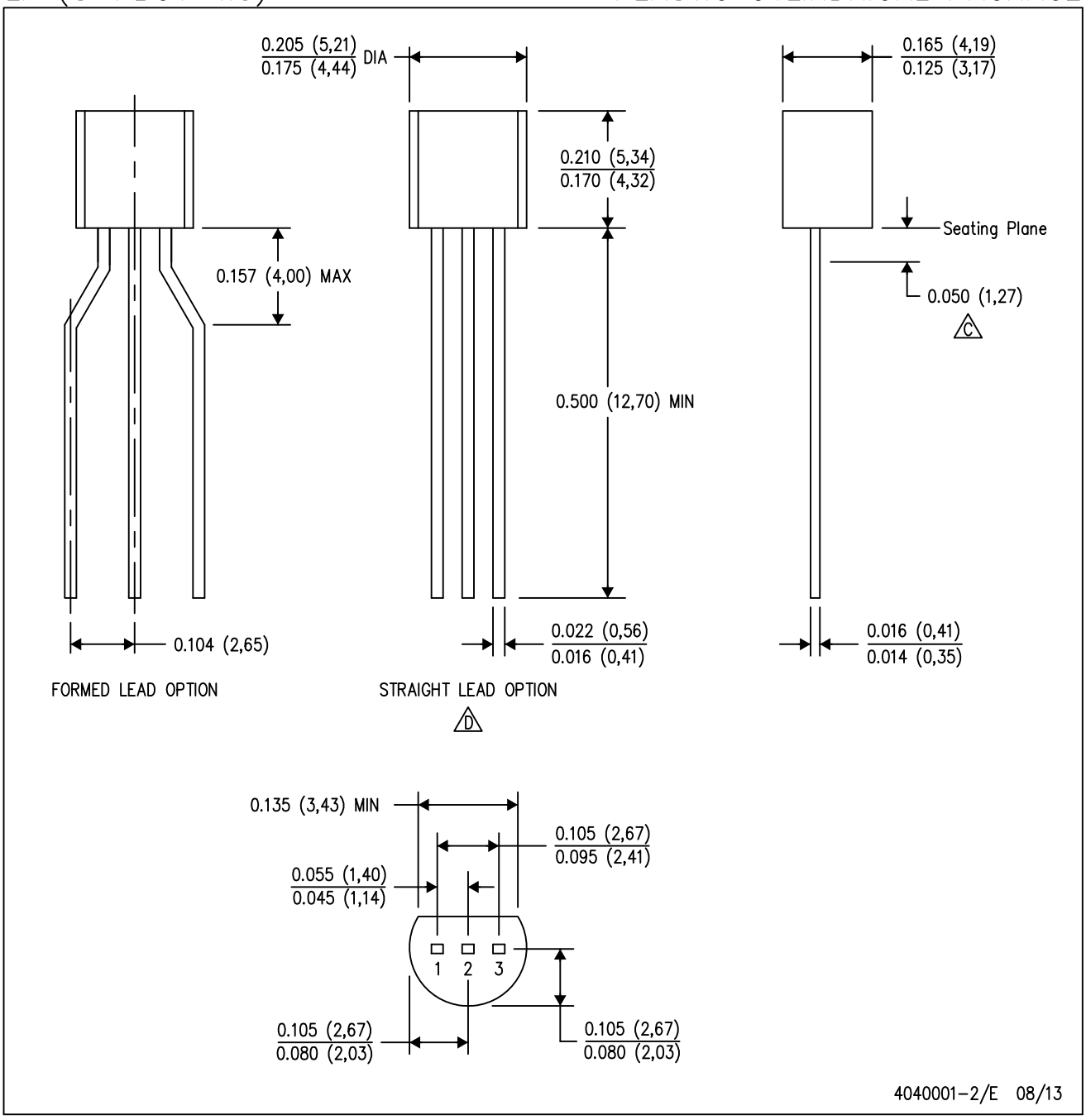

NOTES: A. All linear dimensions are in inches (millimeters).
B. This drawing is subject to change without notice.
C. Lead dimensions are not controlled within this area.
D. Falls within JEDEC TO–226 Variation AA (TO–226 replaces TO–92).
E. Shipping Method:
Straight lead option available in bulk pack only.
Formed lead option available in tape & reel or ammo pack.
Specific products can be offered in limited combinations of shipping mediums and lead options.
Consult product folder for more information on available options.

LP (O–PBCY–W3) PLASTIC CYLINDRICAL PACKAGE

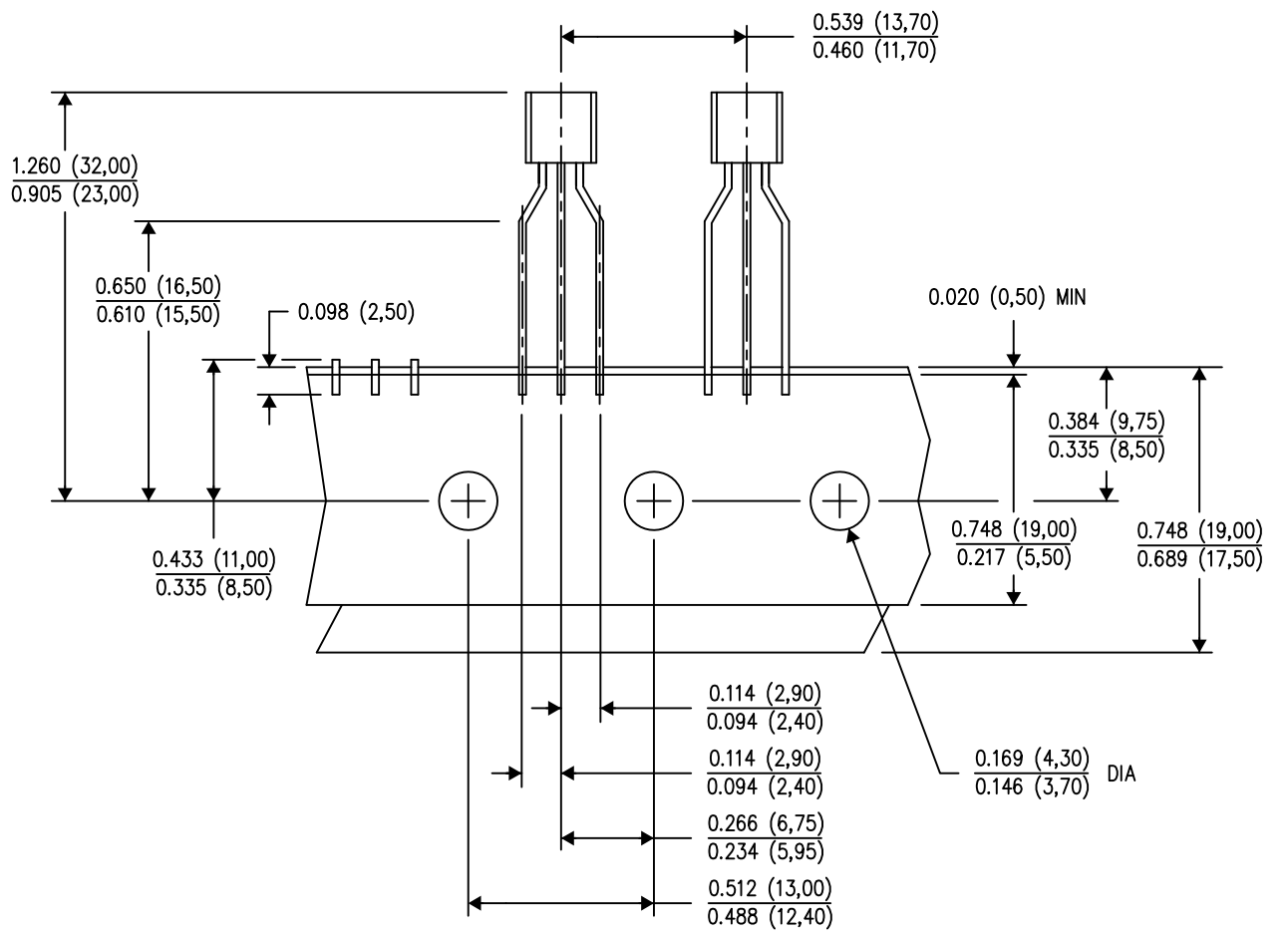

TAPE & REEL

4040001–3/E 08/13

NOTES:
A. All linear dimensions are in inches (millimeters).
B. This drawing is subject to change without notice.
C. Tape and Reel information for the Formed Lead Option package.

IMPORTANT NOTICE

Texas Instruments Incorporated and its subsidiaries (TI) reserve the right to make corrections, enhancements, improvements and other changes to its semiconductor products and services per JESD46, latest issue, and to discontinue any product or service per JESD48, latest issue. Buyers should obtain the latest relevant information before placing orders and should verify that such information is current and complete. All semiconductor products (also referred to herein as “components”) are sold subject to TI’s terms and conditions of sale supplied at the time of order acknowledgment.

TI warrants performance of its components to the specifications applicable at the time of sale, in accordance with the warranty in TI’s terms and conditions of sale of semiconductor products. Testing and other quality control techniques are used to the extent TI deems necessary to support this warranty. Except where mandated by applicable law, testing of all parameters of each component is not necessarily performed.

TI assumes no liability for applications assistance or the design of Buyers’ products. Buyers are responsible for their products and applications using TI components. To minimize the risks associated with Buyers’ products and applications, Buyers should provide adequate design and operating safeguards.

TI does not warrant or represent that any license, either express or implied, is granted under any patent right, copyright, mask work right, or other intellectual property right relating to any combination, machine, or process in which TI components or services are used. Information published by TI regarding third-party products or services does not constitute a license to use such products or services or a warranty or endorsement thereof. Use of such information may require a license from a third party under the patents or other intellectual property of the third party, or a license from TI under the patents or other intellectual property of TI.

Reproduction of significant portions of TI information in TI data books or data sheets is permissible only if reproduction is without alteration and is accompanied by all associated warranties, conditions, limitations, and notices. TI is not responsible or liable for such altered documentation. Information of third parties may be subject to additional restrictions.

Resale of TI components or services with statements different from or beyond the parameters stated by TI for that component or service voids all express and any implied warranties for the associated TI component or service and is an unfair and deceptive business practice. TI is not responsible or liable for any such statements.

Buyer acknowledges and agrees that it is solely responsible for compliance with all legal, regulatory and safety-related requirements concerning its products, and any use of TI components in its applications, notwithstanding any applications-related information or support that may be provided by TI. Buyer represents and agrees that it has all the necessary expertise to create and implement safeguards which anticipate dangerous consequences of failures, monitor failures and their consequences, lessen the likelihood of failures that might cause harm and take appropriate remedial actions. Buyer will fully indemnify TI and its representatives against any damages arising out of the use of any TI components in safety-critical applications.

In some cases, TI components may be promoted specifically to facilitate safety-related applications. With such components, TI’s goal is to help enable customers to design and create their own end-product solutions that meet applicable functional safety standards and requirements. Nonetheless, such components are subject to these terms.

No TI components are authorized for use in FDA Class III (or similar life-critical medical equipment) unless authorized officers of the parties have executed a special agreement specifically governing such use.

Only those TI components which TI has specifically designated as military grade or “enhanced plastic” are designed and intended for use in military/aerospace applications or environments. Buyer acknowledges and agrees that any military or aerospace use of TI components which have ***not*** been so designated is solely at the Buyer's risk, and that Buyer is solely responsible for compliance with all legal and regulatory requirements in connection with such use.

TI has specifically designated certain components as meeting ISO/TS16949 requirements, mainly for automotive use. In any case of use of non-designated products, TI will not be responsible for any failure to meet ISO/TS16949.

Products		**Applications**	
Audio	www.ti.com/audio	Automotive and Transportation	www.ti.com/automotive
Amplifiers	amplifier.ti.com	Communications and Telecom	www.ti.com/communications
Data Converters	dataconverter.ti.com	Computers and Peripherals	www.ti.com/computers
DLP® Products	www.dlp.com	Consumer Electronics	www.ti.com/consumer-apps
DSP	dsp.ti.com	Energy and Lighting	www.ti.com/energy
Clocks and Timers	www.ti.com/clocks	Industrial	www.ti.com/industrial
Interface	interface.ti.com	Medical	www.ti.com/medical
Logic	logic.ti.com	Security	www.ti.com/security
Power Mgmt	power.ti.com	Space, Avionics and Defense	www.ti.com/space-avionics-defense
Microcontrollers	microcontroller.ti.com	Video and Imaging	www.ti.com/video
RFID	www.ti-rfid.com		
OMAP Applications Processors	www.ti.com/omap	**TI E2E Community**	e2e.ti.com
Wireless Connectivity	www.ti.com/wirelessconnectivity		

Mailing Address: Texas Instruments, Post Office Box 655303, Dallas, Texas 75265
Copyright © 2016, Texas Instruments Incorporated