We Measure, We Control, We Record

AirGate-Modbus

INSTRUCTIONS MANUAL V1.0x F

1. INTRODUCTION 3
2. CONNECTION AND INSTALLATION 4
2.1. MECHANICAL INSTALLATION 4
2.1.1. DIMENSIONS 4
2.2. ELECTRICAL INSTALLATIONS 4
2.2.1. INSTALLATION RECOMENDATIONS 4
3. OPERATION 5
3.1. USB 5
3.2. SETUP BUTTON 5
3.3. LEDS 5
4. OPERATION MODES 6
4.1. RS485-MASTER 6
4.2. RS485-SLAVES 6
4.3. USB-MASTER 6
4.4. MULTI-MASTER 6
4.5. COMPLEMENTARY MODES 6
5. USING THE OPERATION MODES 7
5.1. WIRELESS SEGMENTS IN ANY POINT OF A MODBUS NETWORK 7
5.2. WIRELESS SEGMENTS CLOSE TO THE MODBUS MASTER 7
5.3. WIRELESS SEGMENTS CLOSE TO MULTIPLEXED MODBUS MASTERS 7
6. LONG REACH APPLICATION 8
6.1. RESTRICTION 9
7. SOFTWARE SETUP 10
8. CONFIGURATION MODE 11
9. DETERMINATION AND SELECTION OF THE SERIAL PORT (COM) - WINDOWS 12
9.1. DETERMINATION 12
9.2. SELECTION 12
9.3. IMPORTANT RECOMMENDATION 13
10. CONFIGURATIONS - AIRGATE-MODBUS 14
10.1. BASICS 14
10.1.1. PAN ID 14
10.1.2. MODBUS ADDRESS 14
10.1.3. BAUD RATE 14
10.1.4. PARITY 14
10.1.5. TIMEOUT 14
10.1.6. OPERATION MODES 14
10.2. ADVANCED 14
10.2.1. INTERFRAME TIME 14
10.2.2. RF POWER 14
10.2.3. SECURITY 14
10.3. FIRMWARE UPDATE 15
11. DATA COMMUNICATION - SERIAL 16
11.1. RS485 AND USB INTERFACES 16
12. DATA COMMUNICATION (WIRELESS) 17
13. MODBUS COMMANDS 18
13.1. READ HOLDING REGISTERS – 0X03 18
13.2. WRITE HOLDING REGISTERS – 0X06 18
13.3. DESCRIPTION OF SOME REGISTERS 18
13.1. REGISTER 35 – OPERATION CHANNEL 18
13.2. REGISTER 36 – LINK QUALITY INDICATOR RX FATHER 18
13.3. REGISTER 39 – LINK QUALITY INDICATOR RX CHILD 18
13.4. LINK QUALITY INDICATOR 19
14. HOLDING REGISTERS TABLE 20
15. ACCESSORIES 25
16. SPECIFICATIONS 26
16.1. CERTIFICATIONS 26
17. WARRANTY 28

1. INTRODUCTION

AirGate-Modbus is a device with a link interface function between a network with Modbus RTU protocol about RS485 and a wireless network with proprietary protocol about IEEE 802.15.4. Resulting from an advanced technological development, the device stands out in many aspects, such as high performance, high connectivity and easy setup and operation. This technology is presented as the ideal solution for applications which require flexibility and interoperability.

It main characteristics are:

- RP-SMA connector for antenna;
- 2 dBi antenna;
- Two connectors for one RS485 Modbus RTU interface;
- USB Device (Micro-B);
- Status indicator LEDs;
- Button used to enter setup mode.

2. CONNECTION AND INSTALLATION

2.1. MECHANICAL INSTALLATION

AirGate-Modbus has its own enclosure, to be installed in a 35 mm trail.

For the installation in the trail, the metallic hook in the base must be located and pressed against the trail.

2.1.1. DIMENSIONS

The dimensions of **AirGate-Modbus** are shown in **Fig. 1**:

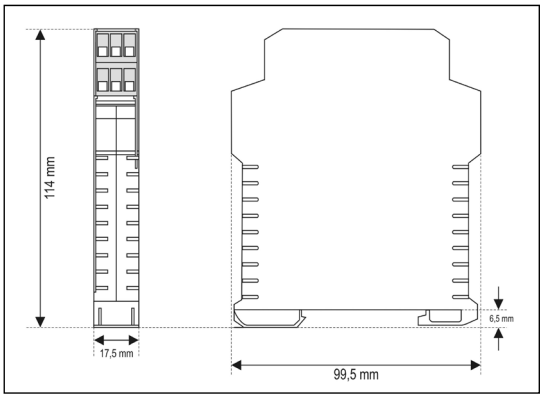

Fig. 1 – Dimensions of **AirGate-Modbus**

2.2. ELECTRICAL INSTALLATIONS

AirGate-Modbus has power supply connector and serial communication interface RS485, as shown in **Fig. 2**.

⚠	Caution when connecting the power supply wires in **AirGate-Modbus**. If the positive conductor of the power source is turned on, even if momentarily, to one of the communication link terminals, the **AirGate-Modbus** may be damaged.

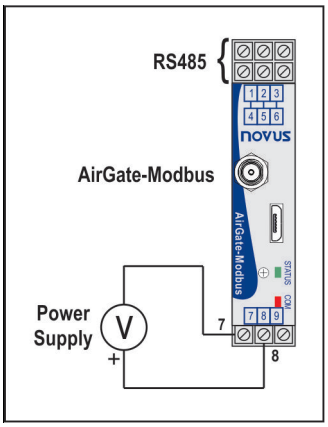

Fig. 2 – Power supply and communication connections of the **AirGate-Modbus**

Fig. 3 shows the electrical connections needed. Terminals 1, 2 and 3 are destined for the communication with Modbus network. These terminals are internally connected to terminals 4, 5 and 6. The terminals 7, 8 and 9 are used for **AirGate-Modbus** power supply.

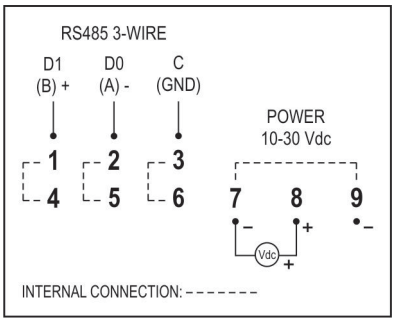

Fig. 3 – AirGate-Modbus electrical connections

2.2.1. INSTALLATION RECOMENDATIONS

Input conductors must go through the system plan separated from the output and power supply conductor and in grounded conduits.

3. OPERATION

In the frontal panel are found 1 USB Micro-B connector, 1 RP-SMA connector for the antenna, 1 setup button and 2 LEDs for status indication, as shown in **Fig. 4**.

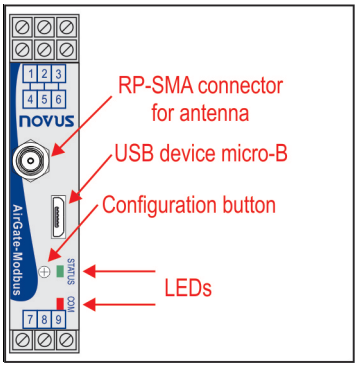

Fig. 4 - AirGate-Modbus frontal panel

3.1. USB

The USB interface of **AirGate-Modbus** is used for setup. Depending on the operation mode set, this interface can be connected to a PC functioning as master of the Modbus RTU network.

3.2. SETUP BUTTON

When press the button, **AirGate-Modbus** enters setup mode and waits the configuration by the USB interface. If there is no communication through the USB interface, after 1 minute, this will go back to normal functioning.

3.3. LEDS

STATUS COM	When turning the device on, the Status LED starts to flash quickly until the **AirGate-Modbus** connects to a wireless network. In the moment that the **AirGate-Modbus** is connected to a wireless network, the Status LED remains turned on. When the setup button is pressed, the Status LED flashes slowly until **AirGate-Modbus** quits operation mode. There are 3 possible ways to quit setup mode: • Clicking in the setup button again; • Applying a configuration successfully; • Waiting 1 minute. The Communication LED flashes to show that the device is receiving packages through any of its interfaces and is forwarding correctly. The speed of the flashing is according to the communication speed. When the firmware of the **AirGate-Modbus** is being updated, the Communication LED will start to flash and the Status LED will be off.

4. OPERATION MODES

AirGate-Modbus can be configured with four different operation modes:

4.1. RS485-MASTER

Simple forwarding between RS485 and IEEE 802.15.4

In this mode, **AirGate-Modbus** uses the RS485 interface to communicate with a Modbus network and the wireless interface to communicate with other **AirGate-Modbus** devices in RS485-Slaves operation modes.

4.2. RS485-SLAVES

Simple forwarding between IEEE 802.15.4 and RS485

In this mode, **AirGate-Modbus** has the objective of continuing the Modbus network. It uses the wireless interface to communicate with another **AirGate-Modbus**, where the network master is located. The RS485 interface is used to communicate with Modbus slaves.

As of firmware version V1.23, when operating in this mode of operation, the **AirGate-Modbus** can begin to automatically perform the repeater function. This function does not require any special configuration. When configured in this mode of operation, after the **AirGate-Modbus** finds a father (RS485-Master, USB-Master, Multi-Master or even another RS485-Slaves), it then is able to offer the option of having children, allowing other **AirGates** that are also operating with RS485-Slaves to automatically pair with it.

4.3. USB-MASTER

USB Routing for RS485 and IEEE 802.15.4

In this mode, **AirGate-Modbus** uses the USB interface to communicate directly with a Modbus master and its RS485 interface to communicate with a Modbus slave's network. The wireless interface is used to communicate with other **AirGate-Modbus** devices in RS485-Slaves operation mode.

4.4. MULTI-MASTER

Multiplexing of the USB and RS485 for IEEE 802.15.4

In this mode, **AirGate-Modbus** uses the RS485 and USB interfaces for the multiplexing of Modbus masters. The masters must be directly linked to these interfaces. The wireless interface is used to communicate with other **AirGate-Modbus** devices in RS485-Slaves operation mode.

When this operation mode is used, a **Timeout** is needed to ensure that each of the masters have a usage time in the network. This **Timeout** is automatically adjusted by ***DigiConfig*** software according to the Baud Rate used by the interfaces, as it can be seen in the section "TIMEOUT" from the chapter "CONFIGURATIONS - AIRGATE-MODBUS". Depending on the number of slaves and of the response time of each slave, it may be necessary to adjust this **Timeout** to reduce possible communication errors.

It's important to emphasize that the **Timeout** configured for this operation mode refers to a time interval managed automatically by the **AirGate-Modbus**. The network masters plugged in each one of the USB and RS485 interfaces must have their **Timeouts** configured with **double** the time set in **AirGate-Modbus Timeout**.

4.5. COMPLEMENTARY MODES

Only devices with distinct functions form a wireless communication network. The operation form of some modes also imposes connection restrictions. The modes compatible with the wireless connection may be seen in **Table 1**:

Mode	Connects with
RS485-MASTER	RS485-SLAVES
USB-MASTER	RS485-SLAVES
MULTI-MASTER	RS485-SLAVES
RS485-SLAVES*	RS485-SLAVES

Table 1 – Complementary Modes

* The RS485-Slaves operation mode only begins to offer the option of having children (behaving as a repeater) after having paired with a father that is already operating on the network. This entire process is done automatically, without any intervention from the operator.

5. USING THE OPERATION MODES

5.1. WIRELESS SEGMENTS IN ANY POINT OF A MODBUS NETWORK

Division of a wired network in wired segments interconnected by wireless segments. The division occurs far from the Modbus master. It uses the RS485 port **AirGate-Modbus** to communicate with the master and the slaves. Additional wireless segments can be inserted. **Fig. 5** illustrates this possible application:

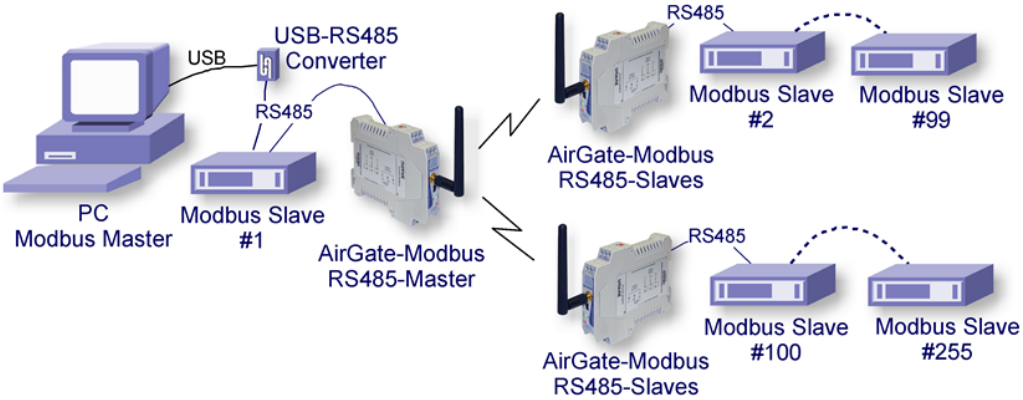

Fig. 5 – Wireless segments in any point of a Modbus network

5.2. WIRELESS SEGMENTS CLOSE TO THE MODBUS MASTER

Division of a wired network in wired segments interconnected by wireless segments. Wireless segments located close to the Modbus master which communicates by USB port. It allows the **AirGate-Modbus** using as a USB-RS485 convertor for the first wired segment. **Fig. 6** illustrates this possible application:

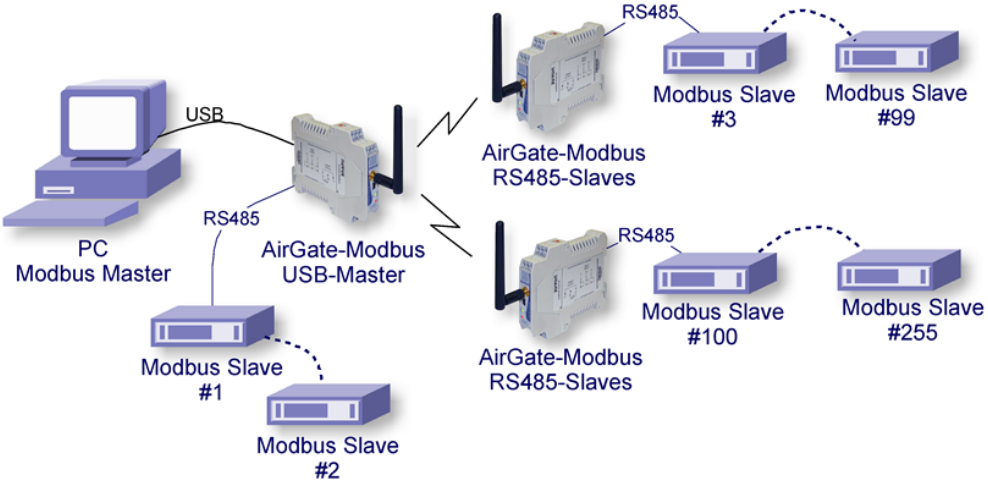

Fig. 6 – Wireless segments close to the Modbus master

5.3. WIRELESS SEGMENTS CLOSE TO MULTIPLEXED MODBUS MASTERS

Multiplexing of 2 masters, one connected to the USB interface and another to the RS485. Wireless section located close to the Modbus masters. It also allows the usage of a single master in any of the two interfaces (USB or RS485). **Fig. 6** illustrates this possible application:

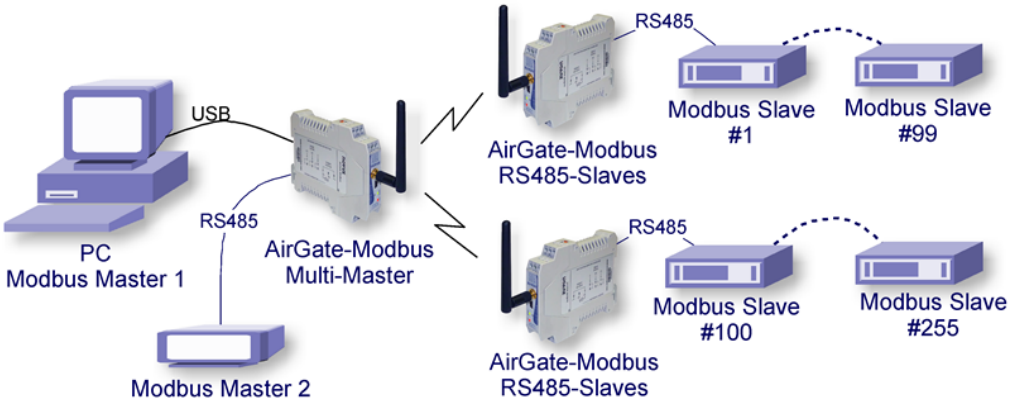

Fig. 7 – Wireless segments close to the multiplexed Modbus masters

6. LONG REACH APPLICATION

In seeking to expand the network and in order to obtain a greater distance, it is possible to assemble a tree shaped topology. As exemplified in **Fig. 8**, to expand the network, an **AirGate-Modbus** configured as a RS485-Slaves (Firmware > 1.23) was inserted with the same **PAN ID (5670)**. In another segment, two **AirGates** were assembled using the RS485 interfaces, an **AirGate-Modbus** operating the RS485-Slaves mode and an **AirGate-Modbus** operating in RS485-Master mode. In this segment, a new **PAN ID (5671)** was created, starting a new star network.

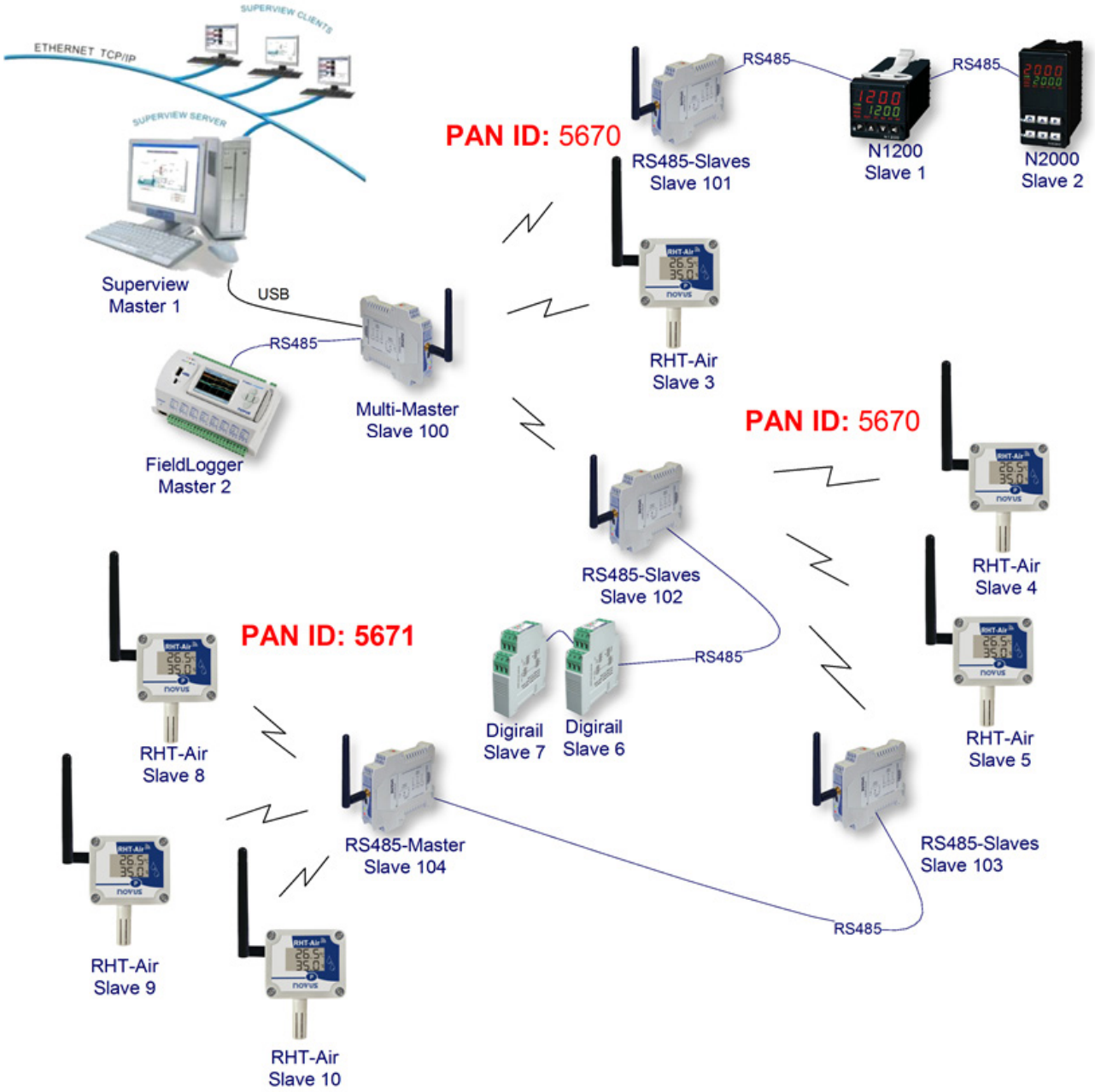

Fig. 8 – Tree topology

6.1. RESTRICTION

In case there is the need to implement a tree-shaped network, a restriction must be observed. Due to issues imposed by Modbus standard, Modbus slaves must not be connected between **AirGate-Modbus** as signed in **Fig. 9**:

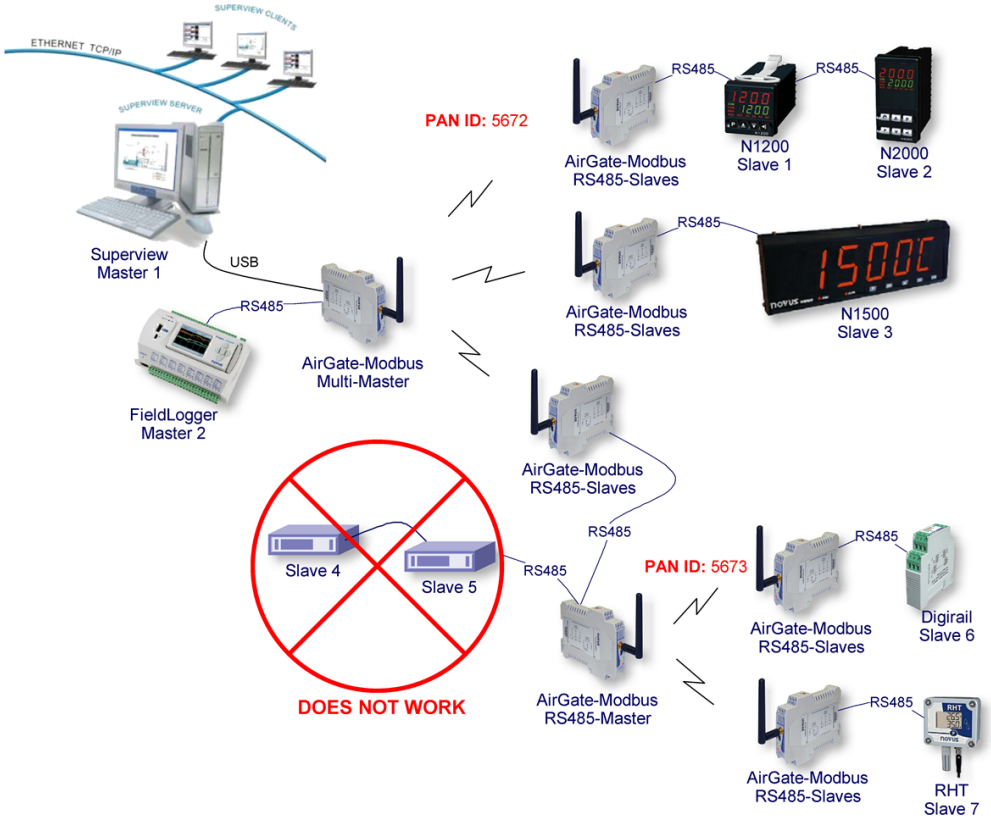

Fig. 9 - Restriction

7. SOFTWARE SETUP

The ***DigiConfig*** application is a *Windows*® program used for the **AirGate-Modbus** configuration. For its installation, execute the file "*DigiConfigSetup.exe*". When installing the setup software, the USB Serial Port driver of **AirGate-Modbus** may be automatically installed, as shown in **Fig. 10:**

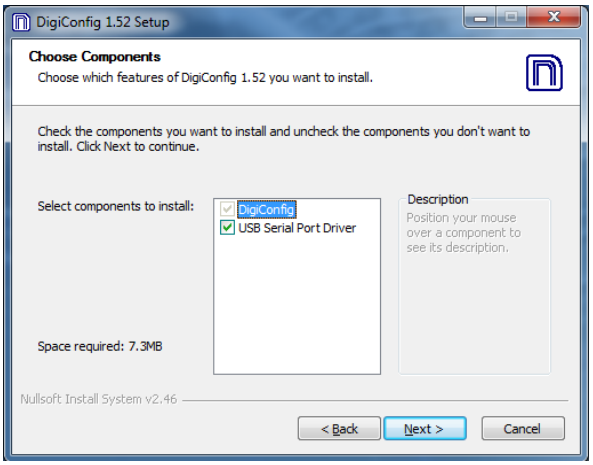

Fig. 10 – Components selection

DigiConfig has a complete help file, with all necessary information for its full usage. To consult the help, start the application and select the **Help** menu or press the F1 key.

Consult the website www.novusautomation.com to get ***DigiConfig*** installer and the additional manuals.

To configure an **AirGate-Modbus**, you must execute the ***Digiconfig***, access "Configurations/Communication" in the main screen and edit the configurations, as shown in **Fig. 11**:

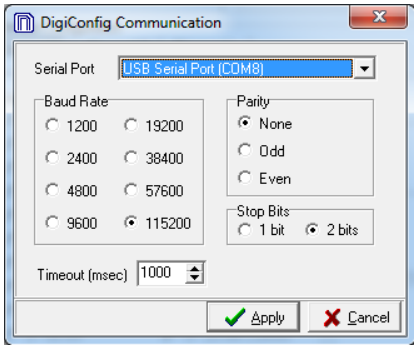

Fig. 11 – ***DigiConfig*** Communication

- Porta Serial = USB Serial Port (COM X);
- Baud Rate = 115200;
- Parity = None;
- Stop Bits = 2 bits;
- Timeout (msec) = 1000.

8. CONFIGURATION MODE

AirGate-Modbus is configurable through ***DigiConfig*** software via USB interface, being necessary to put the device in setup mode. To enter this mode, simply press the SETUP BUTTON, checking that the Status LED now flashes slowly (approximately once per second). In setup mode, the device stops behaving as a gateway from a Modbus network and starts to accept the configurations. In the main screen of the ***DigiConfig*** software (**Fig. 12**), the following configuration must be seen:

- Initial Address = 246

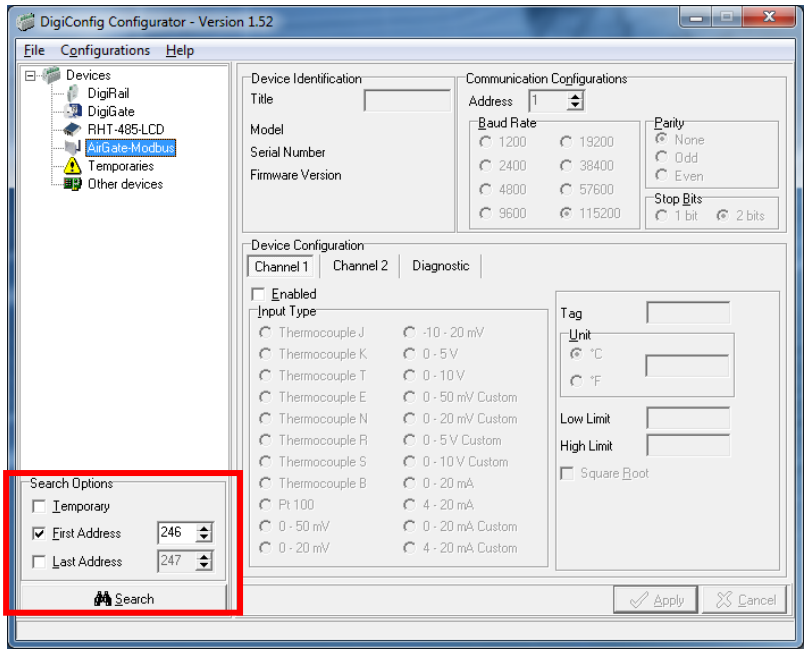

Fig. 12 – ***DigiConfig*** main screen

To edit the configurations of the **AirGate-Modbus**, after clicking the **Search** button, you must select it in the tree to the left of the main screen.

To quit setup mode, you must press the SETUP BUTTON again and **Cancel** or **Apply** a configuration. In this moment, the device is reset and starts to operate according to the last applied configuration.

.

9. DETERMINATION AND SELECTION OF THE SERIAL PORT (COM) - WINDOWS

9.1. DETERMINATION

The serial port associated to the **AirGate-Modbus** is automatically determined by the operational system a few instants after the **AirGate-Modbus** connection. The user may easily identify or alter the COM port associated to the **AirGate-Modbus** accessing the *Windows*® "Device Manager":

Control Panel / System / Hardware / Device Manager / COM & LPT Ports

It's also possible to open the "Device Manager" executing the following command: "***devmgmt.msc***".

After opening the "***Device Manager***", it's possible to verify which is the Serial Port (COM) associated to the **AirGate-Modbus**. As it can be seen in **Fig. 13**, the **AirGate-Modbus** is associated to COM7.

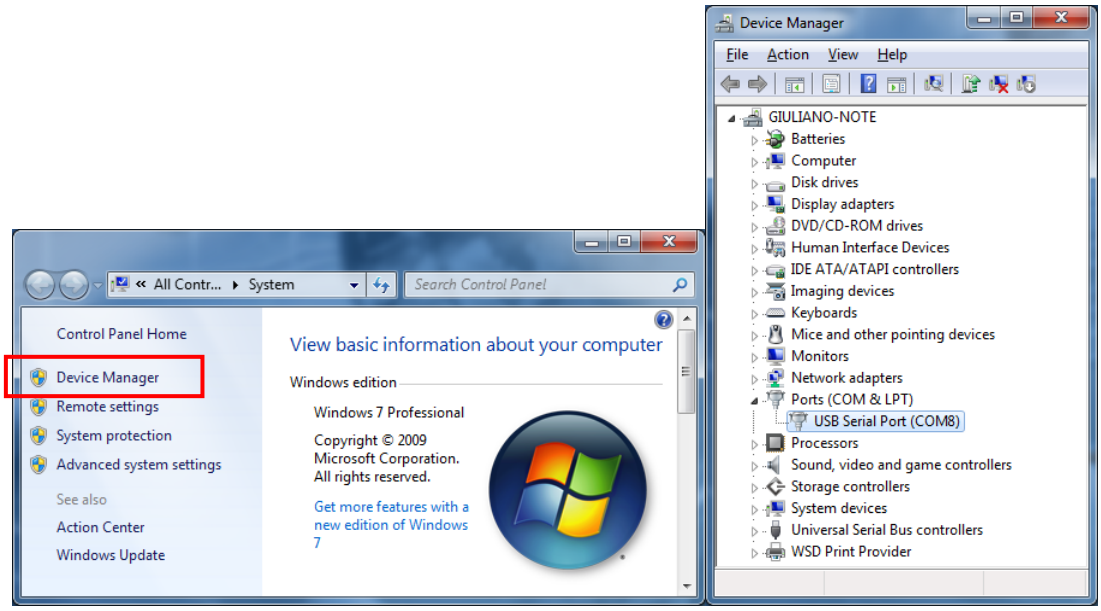

Fig. 13 – COM Port Determination

9.2. SELECTION

In case it's necessary to modify the Serial Port (COM) associated to the **AirGate-Modbus,** select "USB Serial Port (COM X)" where the **AirGate-Modbus** is connected. Access "Action/Properties" and, in the "Port Definitions" tab, click **Advanced**, as shown in **Fig. 14**. In case this tab does not appear, the driver was not installed correctly and the ***DigiConfig*** software must be reinstalled.

In the "Advanced definitions for COMX" window, change the parameter "COM Port Number" for the desired COM, as shown in **Fig. 15**. Some serial ports may be marked as "In Use". Only select one of these ports in case you are sure that it is not being used by another peripheral of your computer.

In some situations, the serial ports may be marked as in use even when the associated device is not installed anymore in the computer. In this case, it is safe to associate this port to the **AirGate-Modbus**.

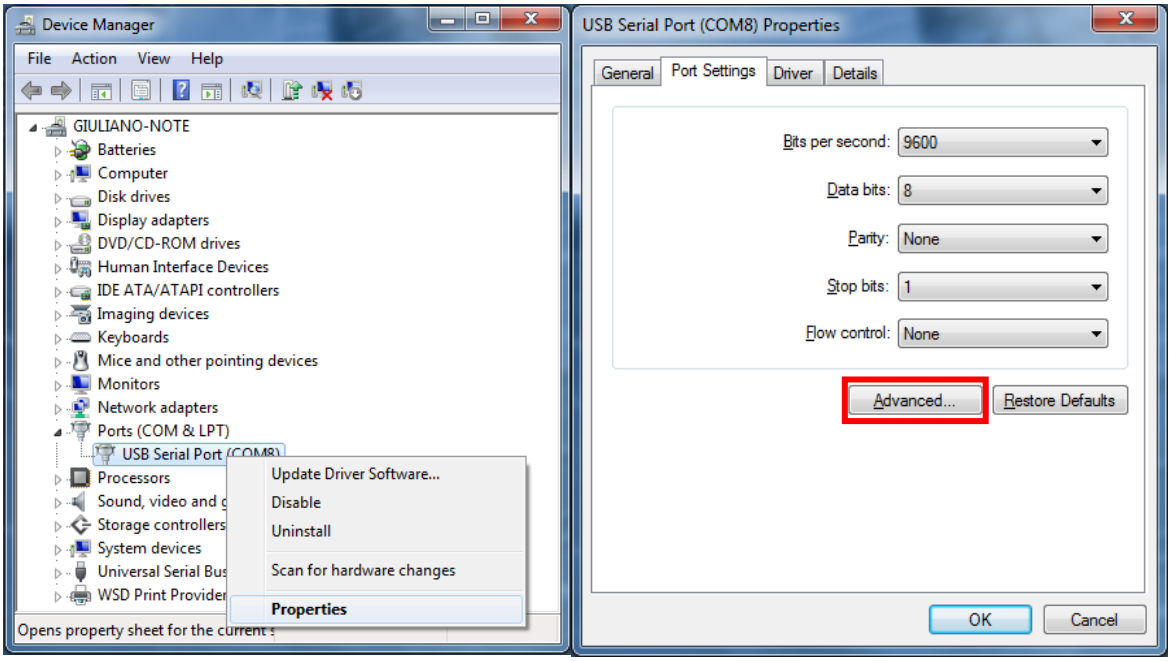

Fig. 14 - Accessing the COM port advanced configuration

9.3. IMPORTANT RECOMMENDATION

To improve the communication of the USB interface, it is recommended the configuration of a Latency Timer. This parameter may be modified accessing "Advanced definitions for COMX" window, as shown in **Fig. 14**.

Later it's possible to verify, as shown in **Fig. 15**, the "Latency Timer (ms)", which must be altered to **4**.

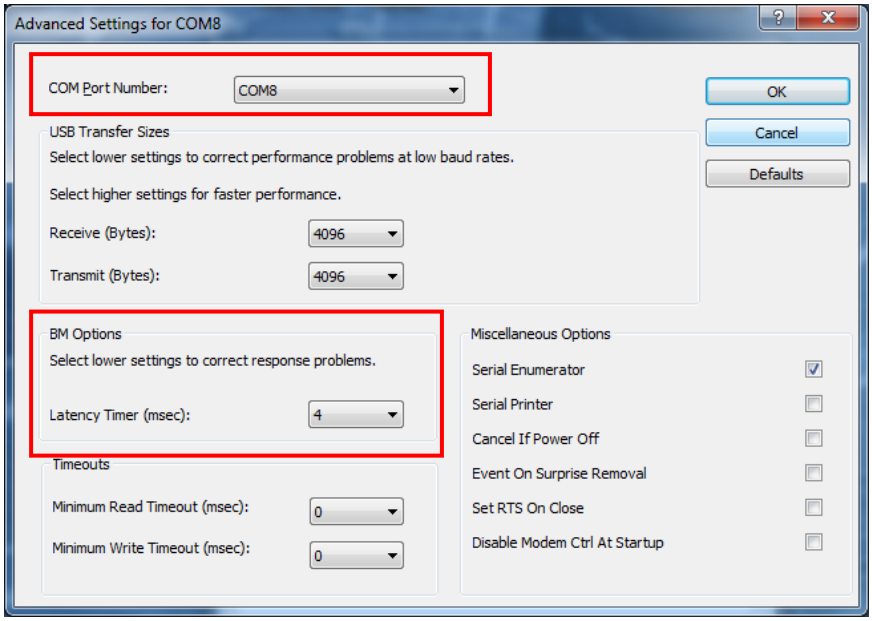

Fig. 15 - Advanced definitions for COM

10. CONFIGURATIONS - AIRGATE-MODBUS

10.1. BASICS

10.1.1. PAN ID

Choose a common identifier for each wireless network. All of the **AirGate-Modbus** devices from a same network must be configured with the same PAN ID.

10.1.2. MODBUS ADDRESS

The Modbus address must be preconfigured on each device so that it is able to communicate with it on the network. In configuration mode, **AirGate-Modbus** always takes the default address 246, Baud Rate 115200, Parity None, 2 Stop Bits. However, in operation mode, each **AirGate-Modbus** in the network can be accessed and configured by its previously configured address in register 32. By default, all **AirGates** are shipped with Modbus address 248 (an invalid address for the Modbus protocol). This prevents if the user forgets to configure the Modbus address of the gateway in advance, it does not conflict with another device on the network.

10.1.3. BAUD RATE

For each interface, select the Baud Rate used by the Modbus network. All of the devices from the network must be configured with the same Baud Rate.

10.1.4. PARITY

For each interface, select the Parity/Stop Bits used by the Modbus network. All of the network devices must be configured with the same Parity/Stop Bits.

10.1.5. TIMEOUT

Timeout (in milliseconds) for the receipt of response bytes to the command sent to the slave station. Calculated automatically by the software, according to the select Baud Rate.

For RS485-Master, RS485-Slaves and USB-Master operation modes, this parameter is only shown in the screen to help the setup of the network master's **Timeout**, which must have its **Timeout** time configured with at least the **Timeout** shown in ***DigiConfig*** screen.

For Multi-Master operation mode, this parameter is used by the **AirGate-Modbus** and may have its **Timeout** altered by the ***DigiConfig*** according to what is explained in the section "MULTI-MASTER" of the "**Erro! Fonte de referência não encontrada.**S" chapter. Noting that, in this case, the **Timeout** configured in each network master must be at least **double** the time configured for **AirGate-Modbus**.

10.1.6. OPERATION MODES

According to the desired functionality, the **AirGate-Modbus** can be configured with different operation modes. These are distinguished altering the functions of the communication interfaces, as explained in the "**Erro! Fonte de referência não encontrada.**" chapter. When selecting an operation mode in ***DigiConfig***, a figure containing a topology example will help in its setup.

10.2. ADVANCED

10.2.1. INTERFRAME TIME

The maximum time allowed (in microseconds) between the receipt of two bytes from a same package. This time is calculated automatically by ***DigiConfig*** software. It must only be modified it any of the network slaves show a high communication error rate.

The **Minimum Time** and **Maximum Time** values are shown in ***DigiConfig*** and range according to the lowest Baud Rate selected for the interfaces in the "Basic Configurations Guide". When clicking the **Auto** button, the text box will be available for altering of the "Interframe Time", which must obligatorily be within the band.

10.2.2. RF POWER

Alters the transmission value of the **AirGate-Modbus**. Valid values from 0 to 20 dBm.

10.2.3. SECURITY

The encryption of the packages may be enabled by selecting the "Enable Security" box. In case you wish to modify the security key, simply click **Change Security Key** and type a new key in the field "Type the key here".

10.3. FIRMWARE UPDATE

This ***DigiConfig*** tab is used for the **AirGate-Modbus** firmware update.

The following steps must be followed:

1. Locate the "Firmware" tab under "Device Configuration".
2. Select "Enable Firmware Update".
3. Click the **Open** button and search the new firmware file (".***cbin***").
4. Click the **Apply** button.
5. Wait the firmware update process conclusion. The ***DigiConfig*** will show a text box with the information **AirGate-Modbus** firmware recording performed successfully. Click the **OK** button.
6. The ***DigiConfig*** will turn back to the initial screen and the **AirGate-Modbus** Status LED will start to flash rapidly.

⚠	During the **AirGate-Modbus** firmware update process, there must not have any interruption. In case there is power outage, disconnection of the USB cable or interruption of the ***DigiConfig*** software during the process, the **AirGate-Modbus** will probably cease operating normally and must be forwarded to the technical support of the supplier.

11. DATA COMMUNICATION - SERIAL

AirGate-Modbus possesses two communication interfaces:

- RS485, acting as communication interface with Modbus RTU protocol;
- USB device, acting with the communication interface of Modbus RTU protocol.

11.1. RS485 AND USB INTERFACES

The RS485 and USB interfaces may be configured to operate in the following speeds (Baud Rates): 1200, 2400, 4800, 9600, 19200, 38400, 57600 and 115200. Besides that, it may be configured to operate with one or two Stop Bit, and in the parities even, uneven and none.

More details about the implementation of a Modbus devices network via RS485 can be found in the document "Basic RS485 and RS422 Concepts", available in the website www.novusautomation.com. The **Table 2** helps the connection of the RS485 communication interface connectors.

D1	D	D+	B	Bidirectional data line.	**Terminals 1 and 4**
D0	$\overline{D}$	D-	A	Inverted bidirectional data line.	**Terminals 2 and 5**
C				Optional connection which improves the communication performance.	**Terminals 3 and 6**
GND					

Table 2 - RS485 Connections

12. DATA COMMUNICATION (WIRELESS)

The **AirGate-Modbus** has an IEEE 802.15.4 Wireless communication interface to connect to the other NOVUS devices that uses the same communication interface.

As of firmware version V1.23, the **AirGate-Modbus** allows not only communication with other **AirGates**, as described in the chapters "OPERATION MODES" and "USING THE OPERATION MODES", but also the option to communicate the **RHT-Air** devices units, which are wireless transmitters of temperature, humidity and dew point.

Each **AirGate-Modbus** can support the connection of 8 **AirGate-Modbus** devices units and 35 **RHT-Air** devices units. Each of these 8 **AirGate-Modbus** devices units allows the connection of over 8 **AirGates** and 35 **RHT-Air** up to the limit of 4 levels of depth, as shown in **Fig. 16**. This network topology is formed automatically at the moment the network begins. One only needs to configure at least one **AirGate-Modbus** as a Multi-Master operation mode, USB-Master or RS485-Master and the other devices: (i) **AirGate-Modbus**, with the RS485-Slaves operation mode; and (ii) **RHT-Air**, all with the same PAN ID. After the configuration, the devices units will automatically be paired based on the best communication link (LQI) that is found.

For a correct functioning of the wireless communication network, it is important for all devices to have the same firmware version. If you have **AirGate-Modbus** device with a firmware version below V1.23 and wish to use the new functionalities available in this version, such as a tree network topology that is totally wireless, or operation with **RHT-Air** device, you only have to update the firmware of all the devices or use a **AirGate-Modbus** with the new version of the firmware operating - such as RS485-Master - in another PAN ID, connected to interface RS485 in one of the **AirGates** operating as RS485-Slaves of the first PAN ID, as shown in the "LONG REACH APPLICATION" chapter**.**

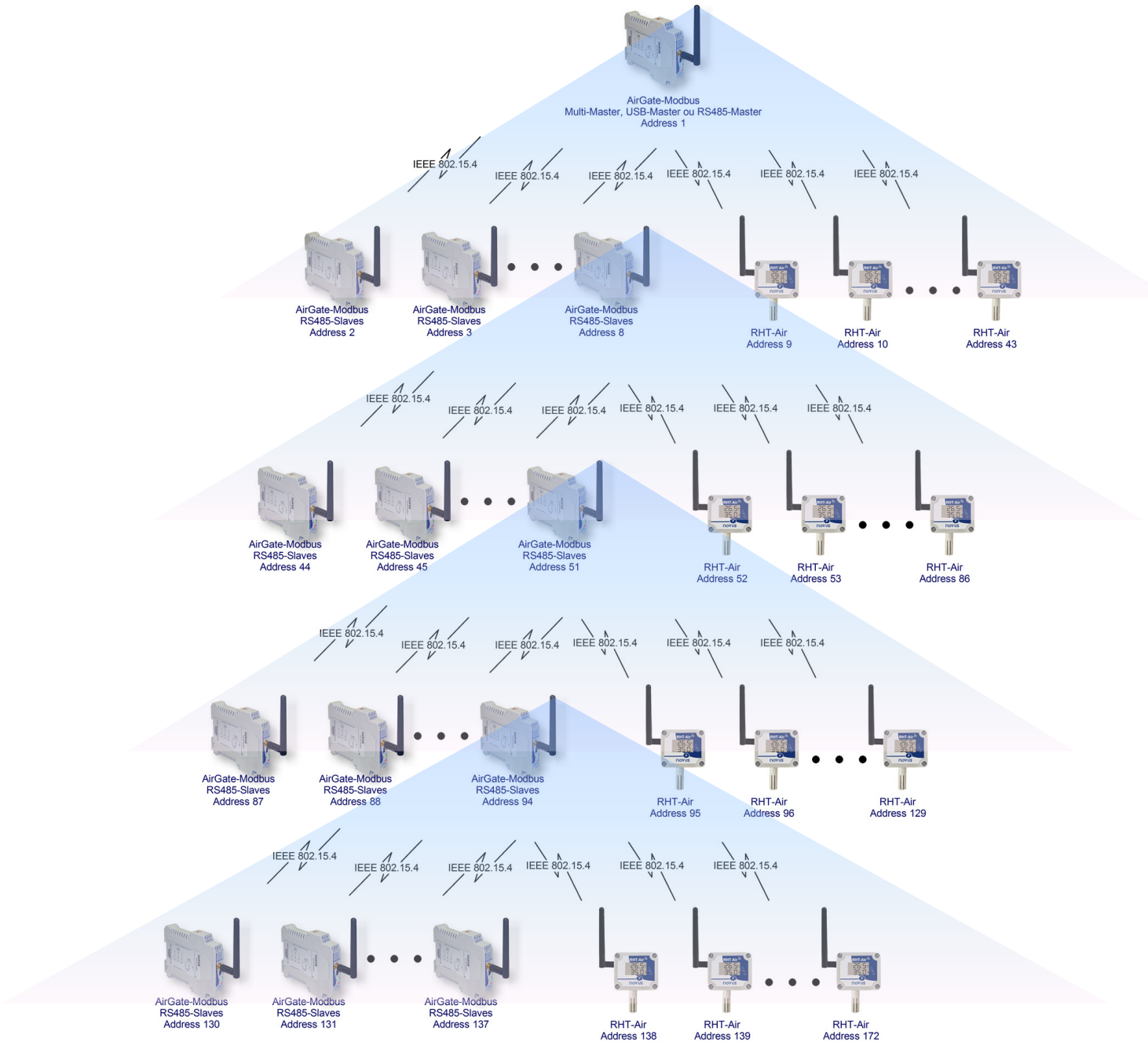

Fig. 16 – Totally wireless tree network topology with **AirGate-Modbus** and **RHT-Air** devices

13. MODBUS COMMANDS

As of the V1.23 firmware version, the **AirGate-Modbus** begins to respond to Modbus commands that are forwarded to your Modbus address, operating as a network slave. Commands forwarded to other slaves will be sent transparently.

The Modbus RTU commands (functions) are implemented and listed below and they are interpreted by **AirGate-Modbus**. For more information about each command and the Modbus protocol in general, access the site www.modbus.org.

13.1. READ HOLDING REGISTERS – 0X03

This command can be used to read the value of one or up to the maximum amount of consecutive holding registers, as shown in the Holding Registers Table.

13.2. WRITE HOLDING REGISTERS – 0X06

This command can be used to write in a holding register, as shown in the Holding Registers Table.

13.3. DESCRIPTION OF SOME REGISTERS

13.1. REGISTER 35 – OPERATION CHANNEL

Shows the operation channel that the device is operating on the network. It can vary from 11 to 25, where each channel is equivalent to an operation frequency. Among these 15 possible channels, the network operates on the channel that has the lowest interference.

CHANNEL	OPERATION FREQUENCY
11	2405 MHz
12	2410 MHz
13	2415 MHz
14	2420 MHz
15	2425 MHz
16	2430 MHz
17	2435 MHz
18	2440 MHz
19	2445 MHz
20	2450 MHz
21	2455 MHz
22	2460 MHz
23	2465 MHz
24	2470 MHz
25	2475 MHz

Table 3 – Operation Channels

13.2. REGISTER 36 – LINK QUALITY INDICATOR RX FATHER

States the quality of the reception link of the connection between the device and the **AirGate-Modbus** father with which it is paired. This value is obtained when measuring the power of the last packet received. This power is measured in dBm, which is a logarithmic measurement of power in mW.

The LQI can vary between -100dBm (worst reception quality) to -15 dBm (best reception quality).

13.3. REGISTER 39 – LINK QUALITY INDICATOR RX CHILD

States the quality of the reception link of the connection between the **AirGate-Modbus** child whose Modbus address was filled-out in the ADDR_FILHO register. This value is obtained when measuring the strength of the last packet received. This power is measured in dBm, which is a logarithmic measurement of power in mW.

The LQI can vary between -100dBm (worst reception quality) to -15 dBm (best reception quality).

13.4. LINK QUALITY INDICATOR

To evaluate if the device was installed in an appropriate manner, it is recommended to verify the quality of the connection between each of the **AirGate-Modbus** and **RHT-Air** device units. This verification should be made by an analysis of registers **36** and **39**, while the network is operating. To make this analysis, it is possible to use the "Diagnostic" tab of the ***DigiConfig*** that states the network typology and the quality of the link between each of the wireless connections in an intuitive fashion.

For device operating in ideal conditions, where there are no obstacles and no type of electromagnetic interference, the LQI will behave similarly to the contents of the graph shown in **Fig. 17**, where a comparison between different levels of power for the Distance versus LQI ratio is made.

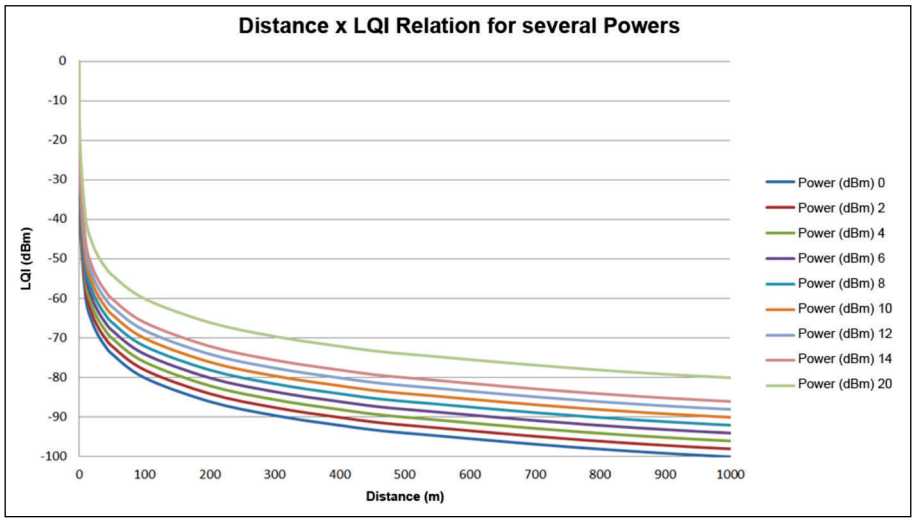

Fig. 17 – Ratio between Distance and LQI for several power levels

Table 4 lists the values obtained in the LQI reading with an evaluation of the signal quality. This same information can be seen in a more intuitive fashion on the "Diagnostic" tab of the ***DigiConfig*** software.

REGISTER VALUE	QUALITY	ICON
0	Device connected via USB	
-15 to -60	Great	
-60 to -70	Very Good	
-70 to -80	Good	
-80 to -90	Average	
-90 to -100	Poor	

Table 4 – Relation between LQI and Signal Quality

NOTE: The model described graphically considers only the means of propagation. The LQI may vary due to various factors, such as peripheral obstacles such as trees, buildings, hills that interfere in the midst of the propagation, as explained by the Fresnel Zone phenomenon.

14. HOLDING REGISTERS TABLE

Below is the table of retentive registers supported by the device:

ADDRES	DESCRIPTION	MINIMUM	MAXIMUM	R/W
0	Used by the configuration software to place the device in firmware update mode. The device only accepts writing in this register if it is in configuration mode. If 1 is written on the register outside the configuration software, the only way to return to the operation mode is turning off and turning back on the device.	0 – Standard mode 1 – Enters in Bootloader mode		R/W
1	Used by the configuration software to place all the registers, minus the protected ones, in compliance with the factory standards. After written in this register it saves the configurations on the flash memory. Only available in configuration mode.	0 – Standard mode 1 – Places all the registers in default mode		R/W
2	Used by the configuration software to restart the device. If it is in configuration mode, it returns to operation mode. If not, then it restarts. Some configurations will only be applied after the device restarts.	0 – Standard mode 1 – Resets the device		R/W
3	Used by the configuration software to save all the configurations on the device's flash memory. If this register is not activated, the configurations made are saved on the flash memory and, when the device restarts, it returns to the previous configurations.	0 – Standard mode 1 – Saves the configurations on the flash memory		R/W
4	Shows if the device is a coordinator of the IEEE 802.15.4 network. Remember that there can only be one coordinator per PAN ID.	1 – It is the Coordinator 0 – It is a Router		R
5	Used to configure the device in one of the 4 operation modes. The operation modes operate as described in the chapter "**Erro! Fonte de referência não encontrada.**".	0 – RS485-Master 1 – RS485-Slaves 2 – USB-Master 3 – Multi-Master		R/W
6	Configured the least significant PAN ID byte.	0	255	R/W
7	Configured the least significant PAN ID byte.	0	255	R/W
8	Enables and disables the device when verifying the CRC of the package every time it receives packages in the RS485 or USB interface. If enabled and the CRC is not correct, the packet is not forwarded to the rest of the network.	0 – Disabled 1 – Enabled		R/W
9	Enables on inhibits the use of cryptography in wireless communication. When enabled, all the devices of a single PAN ID should have their cryptography enabled and use the same SECURITY_KEY.	0 – Disabled 1 – Enabled		R/W
10	1st byte of the SECURITY_KEY. When the cryptography is enabled, all of the devices of a single PAN ID should have the same value in this register.	0	1	R/W
11	2nd byte of the SECURITY_KEY. When the cryptography is enabled, all of the devices of a single PAN ID should have the same value in this register.	0	255	R/W
12	3rd byte of the SECURITY_KEY. When the cryptography is enabled, all of the devices of a single PAN ID should have the same value in this register.	0	255	R/W
13	4th byte of the SECURITY_KEY. When the cryptography is enabled, all of the devices of a single PAN ID should have the same value in this register.	0	255	R/W
14	5th byte of the SECURITY KEY. When the cryptography is enabled, all of the devices of a single PAN ID should have the same value in this register.	0	255	R/W
15	6th byte of the SECURITY_KEY. When the cryptography is enabled, all of the devices of a single PAN ID should have the same value in this register.	0	255	R/W
16	7th byte of the SECURITY_KEY. When the cryptography is enabled, all of the devices of a single PAN ID should have the same value in this register.	0	255	R/W
17	8th byte of the SECURITY_KEY. When the cryptography is enabled, all of the devices of a single PAN ID should have the same value in this register.	0	255	R/W
18	9th byte of the SECURITY_KEY. When the cryptography is enabled, all of the devices of a single PAN ID should have the same value in this register.	0	255	R/W

19	10th byte of the SECURITY_KEY. When the cryptography is enabled, all of the devices of a single PAN ID should have the same value in this register.	0	255	R/W
20	11th byte of the SECURITY_KEY. When the cryptography is enabled, all of the devices of a single PAN ID should have the same value in this register.	0	255	R/W
21	12th byte of the SECURITY KEY. When the cryptography is enabled, all of the devices of a single PAN ID should have the same value in this register.	0	255	R/W
22	13th byte of the SECURITY KEY. When the cryptography is enabled, all of the devices of a single PAN ID should have the same value in this register.	0	255	R/W
23	14th byte of the SECURITY_KEY. When the cryptography is enabled, all of the devices of a single PAN ID should have the same value in this register.	0	255	R/W
24	15th byte of the SECURITY_KEY. When the cryptography is enabled, all of the devices of a single PAN ID should have the same value in this register.	0	255	R/W
25	16th byte of the SECURITY_KEY. When the cryptography is enabled, all of the devices of a single PAN ID should have the same value in this register.	0	255	R/W
26	Configures which Baud Rate will be used in the operation mode in the device USB interface. In configuration mode, as described in chapter "SOFTWARE SETUP", the device always uses Baud Rate 115200.	0 – Baud Rate 1200 1 – Baud Rate 2400 2 – Baud Rate 4800 3 – Baud Rate 9600 4 – Baud Rate 19200 5 – Baud Rate 38400 6 – Baud Rate 57600 7 – Baud Rate 115200		R/W
27	Configures which Baud Rate will be used in the operation mode in the device RS485 interface.	0 – Baud Rate 1200 1 – Baud Rate 2400 2 – Baud Rate 4800 3 – Baud Rate 9600 4 – Baud Rate 19200 5 – Baud Rate 38400 6 – Baud Rate 57600 7 – Baud Rate 115200		R/W
28	Configures the parity and how many Stops Bits will be used in the operation mode in the device USB interface. In configuration mode, as described in chapter "SOFTWARE SETUP", the device always uses ParityNone_StopBits2.	0 – Parity None, Stop Bits 1 1 – Parity None, Stop Bits 2 2 – Parity Even, Stop Bits 1 3 – Parity Odd, Stop Bits 1		R/W
29	Configures the parity and how many Stops Bits will be used in the operation mode in the device RS485 interface. To facilitate connectivity with devices from different manufacturers, when configured with ParityNone_StopBits1 or ParityNone_StopBits2, the device always transmits using 2 Stop Bits and receives with 1 Stop Bit. This allows for communication with devices with both configurations, but this feature is only available with the RS485 interface.	0 – Parity None, Stop Bits 1 1 – Parity None, Stop Bits 2 2 – Parity Even, Stop Bits 1 3 – Parity Odd, Stop Bits 1		R/W
30	Interframe is the time used to characterize the fact that 2 bytes are part of the same Modbus frame (packet). When two bytes are spaced in less time than the time configured in this register, they are part of the same packet. When this time is exceeded, the frame is considered to be finished. In this register, the Interframe Modbus for USB is configured. When configured with 1749, it automatically takes on the values according to the Baud Rate in compliance with the Modbus protocol. If the network master connected to the USB interface has a high rate of errors, it is possible that it is not following the Modbus rule. In this case, increasing the value of the register may solve the problem.	1749	40000	R/W

31	Interframe is the time used to characterize the fact that 2 bytes are part of the same Modbus frame (packet). When two bytes are spaced in less time than the time configured in this register, they are part of the same packet. When this time is exceeded, the frame is considered to be finished. In this register, the Interframe Modbus for USB is configured. When configured with 1749, it automatically takes on the values according to the Baud Rate in compliance with the Modbus protocol. If a master or slave connected to the RS485 interface has a high rate of errors, it is possible that it is not following the Modbus rule. In this case, increasing the value of the register may solve the problem.	1749	40000	R/W
32	As explained in the chapter "CONFIGURATIONS – AIRGATE-MODBUS", this register is used to configure the Modbus address, i.e., the address that identifies the device on the network. As a standard, since it is a gateway and to not conflict with other network devices, all of the **AirGate-Modbus** leave the factory with the address 248. When in configuration mode, as explained in the "CONFIGURATION MODE" chapter, the device always answers for the Modbus 246 address using the USB interface.	1	254	R/W
33	When operating in Multi-Master mode, as explained in the "MULT-MASTER" section, the gateway uses the **Multiplexer** function that needs a **Timeout** to release the interface in case the response does not return to one of the masters. The **Timeout** is configured in this register. This is the maximum amount of wait time for a response from a slave.	300	65535	R/W
34	Used to configure the transmission power of the wireless interface. The larger the configured value, the greater the reach.	0 – 0 dBm 1 – 2 dBm 2 – 4 dBm 3 – 6 dBm 4 – 8 dBm 5 – 10 dBm 6 – 12 dBm 7 – 14 dBm 8 – 20 dBm		R/W
35	Indicates the operation channel which can vary from 11 to 25. According to ANATEL guidelines, the device can operate in the frequencies of channels 11 to 25 for power levels of up to 20 dBm.	11	25	R
36	LQI RX Father Register. Lists the LQI RX Father, i.e., the quality of the reception link to the network father. The LQI Rx is a power measurement of the last packet received by the father. This amount is measured in dBm and varies between -100dBm (worst reception quality) to -15 dBm (best reception quality). This register has a value of 0 when the device is in configuration mode or is the network coordinator (that does not have a father).	-100	-15	R
37	Indicates the number of children (**AirGates** in operation mode RS485-Slaves + **RHTs-Air**) that the device has.	0	43	R
38	ADDR_FILHO register. This register is used to request the **AirGate-Modbus** information about its children. This register should include the Modbus address of the child that requires the information contained in the registers **39** to **48**. The information will only be filled out is the Modbus address corresponds to a device that is in a branch below the one the father belongs to. If the Modbus address does not belong to a direct child, the information will correspond to the child in route to the destination.	0	255	R/W
39	LQI RX Child Register. States the LQI RX Child, i.e., the LQI of the last packet received by the **AirGate** of the child in route to ADDR_FILHO. If ADDR_FILHO is of a child, the LQI corresponds to it; otherwise, the LQI corresponds to the child of Short Mac ROTA_FILHO_SHORT_MAC_0 ROTA_FILHO_SHORT_MAC_1.	-100	-15	R
40	States the number of packets requested to the child with the address ADDR_FILHO as long as **AirGate** has started until reaching the limit of the register.	0	65535	R
41	States the number of packets answered by the child with the address ADDR_FILHO as long as **AirGate** has started until reaching the limit of the register.		65535	R
42	Lists the error rate in % * 100. To obtain the error rate in %, divide the register value by 100.	0	10000	R
43	States the size of the last requested packet to the child with the address ADDR_FILHO.	0	4096	R

44	States the size of the last requested answered by the child with the address ADDR_FILHO.	0	4096	R
45	States the throughput of the last transaction that occurred with the slave of address ADDR_FILHO considering the time from the first byte received by the master's request interface until the last byte transmitted from the child's response to the master's interface and the size of the request and response packets. Information available in Bytes/Second.	0	65530	R
46	States the response time of the last transaction that occurred with the slave of address ADDR_FILHO considering the last byte received by the master's requisition interface until the first byte transmitted from the slave's response packet to the master's interface. Information available in milliseconds.	0	65535	R
47	Register ROTA_FILHO_SHORT_MAC_0. First byte of the Short Mac of the **AirGate-Modbus** route to the child with Modbus address ADDR_FILHO.	0	255	R
48	Register ROTA_FILHO_SHORT_MAC_1. First byte of the Short Mac of the **AirGate-Modbus** route to the child with Modbus address ADDR_FILHO.	0	255	R
49	Noise in channel 11 (Frequency: 2405 MHz, band: 2 MHz) obtained when starting the network. The noise is measured with the power of the noise level of the channel measures in dBm and can vary from -100 dBm (clean channel) to -15 dBm (dirty channel).	-100	-15	R
50	Noise in channel 12 (Frequency: 2410 MHz, band: 2 MHz) obtained when starting the network. The noise is measured with the power of the noise level of the channel measures in dBm and can vary from -100 dBm (clean channel) to -15 dBm (dirty channel).	-100	-15	R
51	Noise in channel 13 (Frequency: 2415 MHz, band: 2 MHz) obtained when starting the network. The noise is measured with the power of the noise level of the channel measures in dBm and can vary from -100 dBm (clean channel) to -15 dBm (dirty channel).	-100	-15	R
52	Noise in channel 14 (Frequency: 2420 MHz, band: 2 MHz) obtained when starting the network. The noise is measured with the power of the noise level of the channel measures in dBm and can vary from -100 dBm (clean channel) to -15 dBm (dirty channel).	-100	-15	R
53	Noise in channel 15 (Frequency: 2425 MHz, band: 2 MHz) obtained when starting the network. The noise is measured with the power of the noise level of the channel measures in dBm and can vary from -100 dBm (clean channel) to -15 dBm (dirty channel).	-100	-15	R
54	Noise in channel 16 (Frequency: 2430 MHz, band: 2 MHz) obtained when starting the network. The noise is measured with the power of the noise level of the channel measures in dBm and can vary from -100 dBm (clean channel) to -15 dBm (dirty channel).	-100	-15	R
55	Noise in channel 17 (Frequency: 2435 MHz, band: 2 MHz) obtained when starting the network. The noise is measured with the power of the noise level of the channel measures in dBm and can vary from -100 dBm (clean channel) to -15 dBm (dirty channel).	-100	-15	R
56	Noise in channel 18 (Frequency: 2440 MHz, band: 2 MHz) obtained when starting the network. The noise is measured with the power of the noise level of the channel measures in dBm and can vary from -100 dBm (clean channel) to -15 dBm (dirty channel).	-100	-15	R
57	Noise in channel 19 (Frequency: 2445 MHz, band: 2 MHz) obtained when starting the network. The noise is measured with the power of the noise level of the channel measures in dBm and can vary from -100 dBm (clean channel) to -15 dBm (dirty channel).	-100	-15	R
58	Noise in channel 20 (Frequency: 2450 MHz, band: 2 MHz) obtained when starting the network. The noise is measured with the power of the noise level of the channel measures in dBm and can vary from -100 dBm (clean channel) to -15 dBm (dirty channel).	-100	-15	R
59	Noise in channel 21 (Frequency: 2455 MHz, band: 2 MHz) obtained when starting the network. The noise is measured with the power of the noise level of the channel measures in dBm and can vary from -100 dBm (clean channel) to -15 dBm (dirty channel).	-100	-15	R

60	Noise in channel 22 (Frequency: 2460 MHz, band: 2 MHz) obtained when starting the network. The noise is measured with the power of the noise level of the channel measures in dBm and can vary from -100 dBm (clean channel) to -15 dBm (dirty channel).	-100	-15	R
61	Noise in channel 23 (Frequency: 2465 MHz, band: 2 MHz) obtained when starting the network. The noise is measured with the power of the noise level of the channel measures in dBm and can vary from -100 dBm (clean channel) to -15 dBm (dirty channel).	-100	-15	R
62	Noise in channel 24 (Frequency: 2470 MHz, band: 2 MHz) obtained when starting the network. The noise is measured with the power of the noise level of the channel measures in dBm and can vary from -100 dBm (clean channel) to -15 dBm (dirty channel).	-100	-15	R
63	Noise in channel 25 (Frequency: 2475 MHz, band: 2 MHz) obtained when starting the network. The noise is measured with the power of the noise level of the channel measures in dBm and can vary from -100 dBm (clean channel) to -15 dBm (dirty channel).	-100	-15	R
64	Used so the user can identify the device. Each byte corresponds to an ASCII character.	0	65535	R/W
65	Used so the user can identify the device. Each byte corresponds to an ASCII character.	0	65535	R/W
66	Used so the user can identify the device. Each byte corresponds to an ASCII character.	0	65535	R/W
67	Used so the user can identify the device. Each byte corresponds to an ASCII character.	0	65535	R/W
68	Used so the user can identify the device. Each byte corresponds to an ASCII character.	0	65535	R/W
From here on out are the protected registers.				
1000	Reserved	0	1	R
1001	Long MAC address 0	0	255	R
1002	Long MAC address 1	0	255	R
1003	Long MAC address 2	0	255	R
1004	Long MAC address 3	0	255	R
1005	Long MAC address 4	0	255	R
1006	Long MAC address 5	0	255	R
1007	Long MAC address 6	0	255	R
1008	Long MAC address 7	0	255	R
1009	Short MAC address 0	0	255	R
1010	Short MAC address 1	0	255	R
1011	Baud Rate of the configuration mode. Standard: 115200.	7	7	R
1012	Parity/Stop Bots of configuration mode. Standard: None/2 Stop Bits.	1	1	R
1013	Interval for association retries. Standard: 1 second.	1	60	R
1014	Maximum number of packet loss before the device quits and restarts.	5	5	R
1015	Reserved	0	0	R
1016	Interval between Polls when there is no ack from father to child.	6000	6000	R
1017	Maximum wait time for a wireless fragment packet.	30	30	R
1018	Version of MAC layer of the device.	214	214	R
1019	Serial number (*word high*)	0	65535	R
1020	Serial number (*word low*)	0	65535	R
1021	Device code	102	102	R
1022	Device firmware version	0	65535	R

Table 5 – Holding Registers Table

15. ACCESSORIES

Extension Cable: With 2.5 meters and a magnetic base, the extension cable allows a better positioning of the **AirGate-Modbus** antenna. On its ends there are RP-SMA Male connectors for connection with **AirGate-Modbus** and RP-SMA Female for connection with the antenna. There is no need to buy a new antenna because the one from **AirGate** may be used.

The antenna extender cable has an IP40 protection rating and operates in the same device temperature range (-10 °C to 70 °C).

Fig. 18 - Magnetic base with cable

16. SPECIFICATIONS

Operating Conditions	Temperature: -10 °C to 70 °C. Humidity: 5 % to 90 % relative humidity non-condensing
Power	10 Vcc to 30 Vcc. Max. consumption: 70 mA (in 24 V).
Communication	Modbus RTU over wireless IEEE 802.15.4 protocol – Operation Band ISM 2.4 GHz. 4 operation modes: • RS485-Master; • RS485-Slaves; • USB-Master; • Multi-Master.
Connections	• USB device (micro-B); • RP-SMA female connector for antenna; • 1 connector for power supply; • 2 connectors for one RS485 Modbus RTU.
Communication Features	• Maximum transmission power: 100 mW (20 dBm); • Maximum range: 1000 meters in open field with a view; • Wireless transmission rate: 250 Kbps; • Baud Rate serial: 1.2 to 115.2 Kbps; • Receiver sensitivity: – 100 dBm; • DSSS Technology (*Direct Sequence Spread Spectrum*); • OQPSK Modulation (*Offset Quadrature Phase Shift Keying*); • Peer-to-peer network topologies, star or tree; • 15 channels operation; • Network identifier (PAN ID); • Data encryption AES-CBC-128 (*Advanced Encryption Standard*).
Wire Gauge for Connections	0.1 to 3 mm² (28 to 12 AWG). Recommended torque: 0,4 Nm.
Number of Devices Supported	Each **AirGate-Modbus** can support the connection of 8 **AirGate-Modbus** devices units and 35 **RHT-Air** devices units. Each of these 8 **AirGate-Modbus** devices units allows the connection of over 8 **AirGates** and 35 **RHT-Air** up to the limit of 4 levels of depth, as shown in **Fig. 16**.
Housing	PA66 housing for DIN rail mounting.
Protection Class	IP20
Dimensions	99.5 x 114 x 17.5 mm + Antenna: 105 mm. Approx. weight: 110 g.
Software Configuration	***DigiConfig*** – Configuration software for *Windows®*
Electromagnetic Compatibility	EN61000-4-2, EN61000-4-3, EN61000-4-4, EN61000-4-5, EN61000-4-6, CISPR11
Certifications	CE, UKCA, FCC, ANATEL (01818-11-07089); Contains FCC ID: 2AXVWBAIRR-NOVUSAIR.

Table 6 - Specifications

Internal protection against reverse polarity of the supply voltage.

16.1. CERTIFICATIONS

FCC

Contains FCC ID: 2AXVWBAIRR-NOVUSAIR

This device complies with Part 15 of the FCC Rules. Operation is subject to the following two conditions: (1) this device may not cause harmful interference, and (2) this device must accept any interference received, including interference that may cause undesired operation.

NOTE: This equipment has been tested and found to comply with the limits for a Class A digital device, pursuant to part 15 of the FCC Rules. These limits are designed to provide reasonable protection against harmful interference when the equipment is operated in a commercial environment. This equipment generates, uses, and can radiate radio frequency energy and, if not installed and used in accordance with the instruction manual, may cause harmful interference to radio communications. Operation of this equipment in a residential area is likely to cause harmful interference in which case the user will be required to correct the interference at his own expense

WARNING: To satisfy FCC RF exposure requirements, a separation distance of 20 cm or more should be maintained between the antenna of this device and persons during operation. To ensure compliance, operations at closer distances than this are not recommended. This device and its antenna(s) must not be co-located or operating in conjunction with any other

This product has been tested with Wellshow AR0035EW0119N antenna.

Changes or modifications not expressly approved by the party responsible for compliance could void the user's authority to operate the equipment.

CE Mark / UKCA

This is a Class A product. In a domestic environment, this product may cause radio interference in which case the user may be required to take adequate measures.

ANATEL

This device does not provide protection against harmful interference, and may not cause interference in a properly authorized system.

For more information, see ANATEL's website: www.anatel.gov.br.

17. WARRANTY

Warranty conditions are available on our website www.novusautomation.com/warranty.