awave

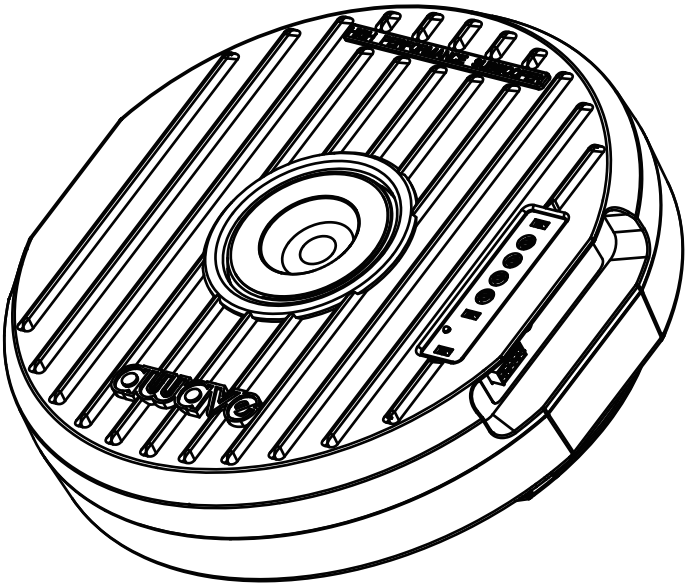

AST-11TV6
USER MANUAL

INTRODUCTION

Thank you for purchasing a AWAVE spare wheel amplified sub woofer for your car sound system. This amplified sub woofer system utilizes the existing spare wheel Well without taking up the space too much in your vehicle and it can be simply and invisibly installed via the provided plug and play harness.
If you decide to install the amplifier by yourself, please thoroughly read through this manual before getting started. This manual will help familiarize yourself with this amplifier and guide you through the installation process and procedures.

Features

Sealed cast aluminum enclosure.
Plug and Play connection system, easy to hook up.
Easy installation and removal.
Built-in high-efficiency class D amplifier.
Completely hidden installation and out of sight.
Remote control provided for volume.

Contents

1. Spare tire active subwoofer	1 pc
2. Ower's Manual (Chinese)	1 pc
3. Ower's Manual（English）	1 pc
4. Screw with nut	1 pc
5. Power plug	1 pc
6. Signal Wire	1 pc
7. Remote control	1 pc
8. Mounting Bracket	1 pc

SIGNAL INPUT & POWER CONNECTION

Fig.1:

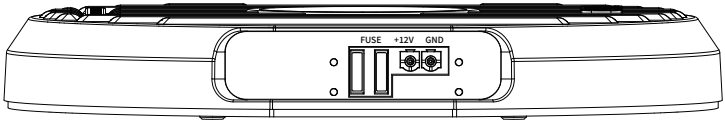

Fig.2:

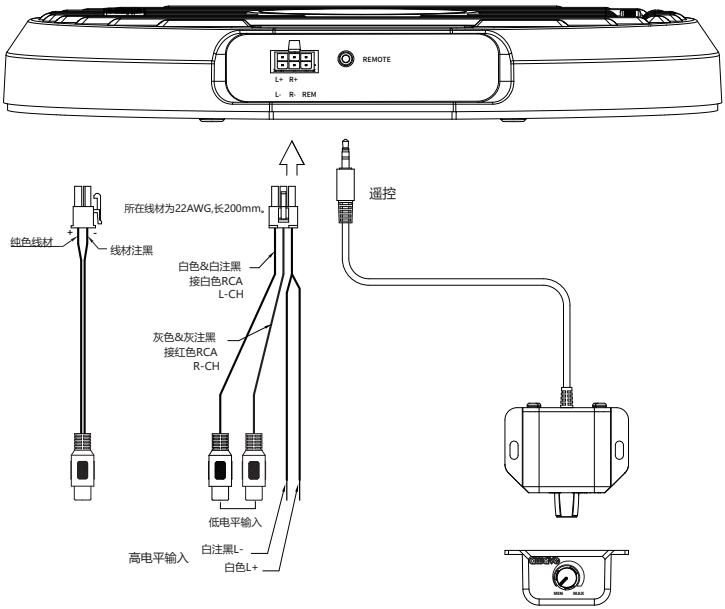

SPECIFICATIONS

MODEL:	AST-11TV6
RMS power	500W
THD	<0.5%
Signal-to-noise ratio	>95dB
Frequency response	25Hz-150Hz
Input sensitivity, high level	260mV-12V
Input sensitivity, low level	50mV-3V
Low Pass Filter	50Hz-150Hz
Bass Boost	0 to+6dB
Subsonic Filter	25Hz
Fuse rating	50A
Subwoofer	11inch,0.15ohm
All specifications subject to change without notice	

WARNING

Continuos listening at high sound level {above 110dB} can durably damage your hearing. Listening above 130dB can damage your hearing permanently!

POWER CONNECTION

A:Connect the ground terminal to the closest point on the chassis of the vehicle.Keep this ground wire to less than 39”(100cm) in length. Use 8 gauge(or heavier) wire (NOT SUPPLIED).

B:connect the remote terminal to the remote output of the head unit using 16 gauge (NOT SUPPLIED)(or heavier) wire(only Low Level input method).

C:Connect an empty fuse holder within 18”(45cm) of the car battery,and run 8 gauge (or heavier) cable (NOT SUPPLIED) from this fuse to the amplifier location. Then connect the fuse holder to the”BATT+”(+12v) connection on the subwoofer.

Fig.3:

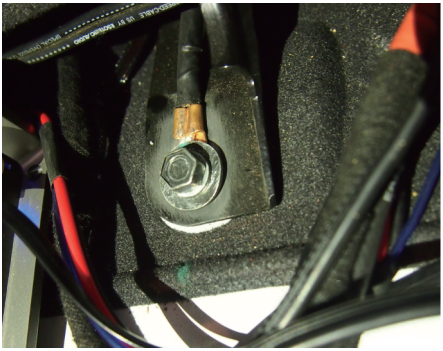

A.Connect the ground/negative cable(Black wire) to any solid metal grounding point of your vehicle body.

Fig.4:

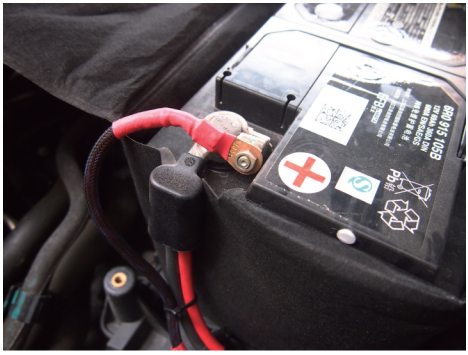

C.Run the power/positive cable(red wire)to get the power from your vehicle’s battery.(connect the power cable to the positive pole of the battery)

Troubleshooting

If you experience operation or performance problems with this product, compare your installation with the electrical wiring diagram on the previous pages. If problems persist, read the following troubleshooting tips which may help eliminate the problems.

SYMPTOM	POSSIBLE REMEDY
Amplifier will not power up.	*Check to make sure you have a good ground connection.* *Check that the Remote Input (Turn-On) has at least 5VDC.* *Check that there is battery power on the (+) terminal.* *Check that there is at least 12v.* *Check all fuses, replace if necessary.* *Make sure that the Protection LED is not illuminated. If it is lit, shut off the amplifier briefly, and then repower it.*
Protection LED comes on when amplifier is powered up	*Check for short circuits on speaker leads.* *Turn down the volume control on the head unit to prevent overdriving.* *Remote speaker leads, and reset the amplifier. If the Protection LED still comes on, then the amplifier is faulty and needs servicing.*
No output.	*Check that all fuses are OK.* *Check that unit is properly grounded.* *Check that the Remote Input (Turn-On) has at least 5VDC.* *Check that the RCA audio cables are plugged into the proper inputs.* *Check all speaker wiring.*
Low output.	*Reset the Level Control.* *Check the Crossover Control settings.*
High hiss in the sound.	*Disconnect all RCA inputs to the power sub's control panel. If the hiss disappears, then plug in the component driving the amplifier and unplug its inputs. If the hiss disappears at this point, go on until the faulty/noisy component is found.* *It is best to set the amplifier's input level control as low as possible. The best subjective signal-to-noise ratio is achieved in this manner. Try to set the head unit as high as possible (without distortion) and the amp input level as low as possible.*
Squealing noise is present.	*Check for improperly grounded RCA interconnects.*
Distorted sound.	*Check that the Input Level Control is set to match the signal level of the head unit. Always try to set the Input Level as low possible.* *Check that all crossover frequencies are properly set.* *Check for short circuits on the speaker leads.*
Amplifier gets very hot.	*Check that the minimum speaker impedance for the amp model is correct.* *Check that there is good air circulation around the amp. In some applications, it may be necessary to add and external cooling fan.*
Engine noise (static type)	*This is usually caused by poor quality RCA cables, which can pick up radiated noise. Use only the best quality cables, and route them away from power cables.*
Engine noise (alternator whine)	*Check that the RCA grounds are not shorted to the vehicle chassis.* *Check that the head unit is properly grounded.*

INSTALLATION GUIDE

NOTE: This subwoofer maybe installed only in the spare wheel well,and it is designed to fit inside an above 15-inches rim spare tire!

Fig.5:

A. First thing make sure this subwoofer can fit into your spare tire well.
B. Clean the trunk of the vehicle.
C. Remove the trunk flooring and foam pad to get the spare tire.
(Two examples of installation methods)

Fig.6:

Using fix bolt(supplied)

A:Thoroughly clean the spare tire.
B:Move the original bolt of fixing the spare tire.

Fig.7:

Using fix bolt and ABS Nut(supplied)

A:Thoroughly clean the spare tire.
B:Replace the original spare fixing nut with supplied one.

Fig.8:

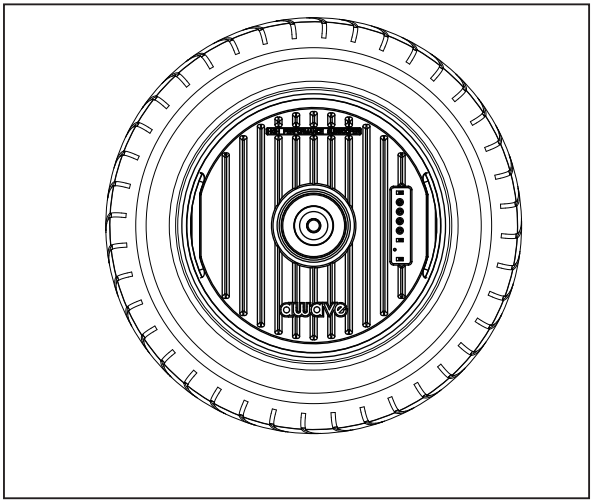

A.Take the subwoofer in the spare tire. B.Take out the handle

Fig.9:

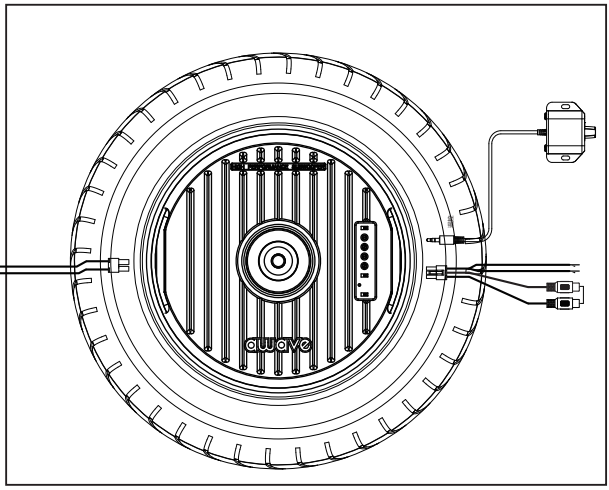

A.Fix the subwoofer with supplied bolt.
B.Connect the remote and connector.
C.Fix the handle.

PRODUCT DIMENSIONS

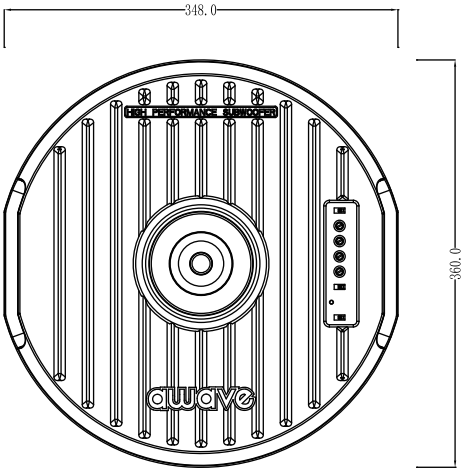

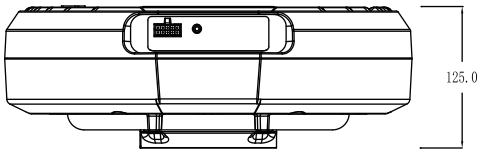

Guangzhou Oaktree Trading Co. Ltd
WeChat Account: gzoaktree2013

www.awaveaudio.com

Awave car audio.official

awave_caraudio

Awave car audio.official