CE EMC TEST REPORT

For

Product: **NAIL DUST COLLECTOR**
Model: **SPT-400, SPT-401, DSPT-402, SPT-403, SPT-404, SPT-405, SPT-406, SPT-407, SPT-408, SPT-409, SPT-410, SPT-500, SPT-501, SPT-502, SPT-503, SPT-504, SPT-505, SPT-506, SPT-507, SPT-508, SPT-509, SPT-510**
Report No.: **HTT202604592ER**
Issued Date: **Jun. 16, 2026**

Issued for:

SHAOXING ESEEN ELECTRIC EQUIPMENTS MANUFACTURE CO.,LTD
NO.1 YOUYI ROAD SONGXIA INDUSTRIAL ZOOM, SHANGYU DISTRICT ,SHAOXING CITY ,ZHEJIANG, CHINA.

Issued By:

Shenzhen HTT Technology Co., Ltd.
1F, B Building, Huafeng International Robotics Industrial Park,
Gushu, Xixiang Street, Bao'an District, Shenzhen

Note: *This report shall not be reproduced except in full, without the written approval of Shenzhen HTT Technology Co., Ltd. This document may be altered or revised by Shenzhen HTT Technology Co., Ltd. personnel only, and shall be noted in the revision section of the document.*

The test results in the report only apply to the tested sample.

This report shall not be reproduced except in full, without the written approval of Shenzhen HTT Technology Co., Ltd.

TABLE OF CONTENTS

1 TEST CERTIFICATION 3
2 TEST RESULT SUMMARY 4
3 EUT DESCRIPTION 5
4 TEST METHODOLOGY 6
4.1. DECISION OF FINAL TEST MODE 6
4.2. EUT SYSTEM OPERATION 6
5 SETUP OF EQUIPMENT UNDER TEST 7
5.1. DESCRIPTION OF SUPPORT UNITS 7
6 FACILITIES AND ACCREDITATIONS 8
6.1. FACILITIES 8
6.2. MEASUREMENT UNCERTAINTY 8
7 EMISSION TEST 9
7.1. CONDUCTED EMISSION MEASUREMENT 9
7.2. DISTURBANCE POWER MEASUREMENT 14
7.3. HARMONICS CURRENT MEASUREMENT 18
7.4. VOLTAGE FLUCTUATION AND FLICKS MEASUREMENT 21
8 IMMUNITY TEST 23
8.1. GENERAL DESCRIPTION 23
8.2. GENERAL PERFORMANCE CRITERIA DESCRIPTION 24
8.3. ELECTROSTATIC DISCHARGE (ESD) 25
8.4. RADIATED, RADIO-FREQUENCY, ELECTROMAGNETIC FIELD (RS) 29
8.5. ELECTRICAL FAST TRANSIENT (EFT) 32
8.6. SURGE IMMUNITY TEST 35
8.7. CONDUCTED RADIO FREQUENCY DISTURBANCES (CS) 38
8.8. POWER FREQUENCY MAGNETIC FIELD 41
8.9. VOLTAGE DIP & VOLTAGE INTERRUPTIONS 43
9 PHOTOGRAPHS OF EUT 45

Hotline: 400-6655-351 Tel: 0755-23595200 Fax: 0755-23595201 http://www.httprc.com.

1 TEST CERTIFICATION

Product:	NAIL DUST COLLECTOR
Trade Name:	SPT
Model:	SPT-400
Applicant:	SHAOXING ESEEN ELECTRIC EQUIPMENTS MANUFACTURE CO.,LTD NO.1 YOUYI ROAD SONGXIA INDUSTRIAL ZOOM, SHANGYU DISTRICT ,SHAOXING CITY ,ZHEJIANG, CHINA.
Manufacturer:	SHAOXING ESEEN ELECTRIC EQUIPMENTS MANUFACTURE CO.,LTD NO.1 YOUYI ROAD SONGXIA INDUSTRIAL ZOOM, SHANGYU DISTRICT ,SHAOXING CITY ,ZHEJIANG, CHINA.
Tested:	Apr. 13, 2026 ~ Apr. 17, 2026
Applicable Standards:	**EN IEC 55014-1:2021** **EN IEC 55014-2:2021** **EN IEC 61000-3-2: 2019 +A2:2024** **EN 61000-3-3:2013+A2:2021+AC:2022-01**

Deviation from Applicable Standard
None

The above equipment has been tested by Shenzhen HTT Technology Co., Ltd. and found compliance with the requirements set forth in the technical standards mentioned above. The results of testing in this report apply only to the product/system, which was tested. Other similar equipment will not necessarily produce the same results due to production tolerance and measurement uncertainties.

Tested By: Jeremy Zhang ***Date:*** ***Jun. 16, 2026***

Check By: Bruce Zhu ***Date:*** ***Jun. 16, 2026***

Approved By: Kevin Yang ***Date:*** ***Jun. 16, 2026***

(Kevin Yang)

Hotline: 400-6655-351 Tel: 0755-23595200 Fax: 0755-23595201 http://www.httprc.com.

2 TEST RESULT SUMMARY

EMISSION			
Standard	**Item**	**Result**	**Remarks**
EN IEC 55014-1:2021	Conducted (Main Port)	Pass	Meet limit
	Disturbance power	Pass	Meet limit
EN IEC 61000-3-2: 2019 +A2:2024	Harmonic current emissions	Pass	Meets the requirements
EN 61000-3-3:2013+A2:2021+AC:2022-01	Voltage fluctuations & flicker	Pass	Meets the requirements

IMMUNITY【EN IEC 55014-2:2021】			
Standard	**Item**	**Result**	**Remarks**
EN 61000-4-2:2009	ESD	Pass	Meets the requirements of Performance Criterion B
EN 61000-4-3:2006+A1:2008 +A2:2010	RS	Pass	Meets the requirements of Performance Criterion A
EN 61000-4-4:2012	EFT	Pass	Meets the requirements of Performance Criterion B
EN 61000-4-5:2014+A1:2017	Surge	Pass	Meets the requirements of Performance Criterion B
EN 61000-4-6:2014+AC:2015	CS	Pass	Meets the requirements of Performance Criterion A
EN 61000-4-8: 2010	PFMF	Pass	Meets the requirements of Performance Criterion A
EN IEC 61000-4-11:2020	Voltage dips & voltage variations	Pass	Meets the requirements of Performance Criterion C

Note: 1. The test result judgment is decided by the limit of test standard

2. The information of measurement uncertainty is available upon the customer's request.

Hotline: 400-6655-351 Tel: 0755-23595200 Fax: 0755-23595201 http://www.httprc.com.

3 EUT DESCRIPTION

Product	NAIL DUST COLLECTOR
Model	SPT-400
Trade Mark	SPT
Applicant	SHAOXING ESEEN ELECTRIC EQUIPMENTS MANUFACTURE CO.,LTD
EUT Type	☒ Engineering Sample. ☐ Product Sample, ☐ Mass Product Sample.
Serial Number	N/A
EUT Power Rating	AC 100V-230V, 3A, 35-60W

Model list and Models difference

No.	Model Number	Tested With
1	SPT-400	☒
Other models	SPT-401, DSPT-402, SPT-403, SPT-404, SPT-405, SPT-406, SPT-407, SPT-408, SPT-409, SPT-410, SPT-500, SPT-501, SPT-502, SPT-503, SPT-504, SPT-505, SPT-506, SPT-507, SPT-508, SPT-509, SPT-510	☐
NOTE: SPT-400 is tested model, other models are derivative models, The models are identical in circuit , only different on the model names, size, So the test data of SPT-400 can represent the remaining models.		

4 TEST METHODOLOGY

4.1. DECISION OF FINAL TEST MODE

The EUT was tested together with the thereinafter additional components, and a configuration, which produced the worst emission levels, was selected and recorded in this report.

The following test mode(s) were scanned during the preliminary test:

Pre-Test Mode		
Emission	Conducted Emission	Mode: Working
	Disturbance power	Mode: Working

After the preliminary scan, the following test mode was found to produce the highest emission level.

Pre-Test Mode		
Emission	Conducted Emission	Mode: Working
	Disturbance power	Mode: Working

4.2. EUT SYSTEM OPERATION

1. Set up EUT with the support equipments.
2. Make sure the EUT work normally during the test.

5 SETUP OF EQUIPMENT UNDER TEST

5.1. DESCRIPTION OF SUPPORT UNITS

The EUT has been tested as an independent unit together with other necessary accessories or support units. The following support units or accessories were used to form a representative test configuration during the tests.

No.	Equipment	Model No.	Serial No.	FCC ID	Trade Name	Data Cable	Power Cord
1.	N/A	N/A	N/A	N/A	N/A	N/A	N/A

Note:

1) All the equipment/cables were placed in the worst-case configuration to maximize the emission during the test.
2) Grounding was established in accordance with the manufacturer's requirements and conditions for the intended use.

6 FACILITIES AND ACCREDITATIONS

6.1. FACILITIES

All measurement facilities used to collect the measurement data are located at HTT Lab

The sites are constructed in conformance with the requirements of ANSI C63.4 and CISPR Publication 14. All receiving equipment conforms to CISPR Publication 16-1, “Radio Interference Measuring Apparatus and Measurement Methods.”

6.2. MEASUREMENT UNCERTAINTY

Where relevant, the following measurement uncertainty levels have been estimated for tests performed on the EUT as specified in CISPR 16-4-2:

Measurement	Frequency	Uncertainty
Conducted emissions	150kHz~30MHz	+/- 3.59dB
Disturbance power	30MHz~300MHz	+/- 4.77dB

This uncertainty represents an expanded uncertainty expressed at approximately the 95% confidence level using a coverage factor of k=2.

7 EMISSION TEST

7.1. CONDUCTED EMISSION MEASUREMENT

7.1.1. LIMITS

FREQUENCY (MHz)	At mains terminal		At load terminal and additional terminal	
	1	2	3	4
0.15 - 0.5	66 - 56	59 - 46	80	70
0.50 - 5.0	56	46	74	64
5.0 - 30.0	60	50	74	64

NOTE:
(1) The lower limit shall apply at the transition frequencies.
(2) The limit decreases in line with the logarithm of the frequency in the range of 0.15 to 0.50 MHz.
(3) All emanations from device or system, including any network of conductors and apparatus connected thereto, shall not exceed the level of field strengths specified above.

7.1.2. TEST INSTRUMENTS

Conducted Emission Shielding Room Test Site (843)				
Name of Equipment	**Manufacturer**	**Model**	**Serial Number**	**Calibration date**
EMI Test Receiver	R&S	ESCI	100005	2025.05.21
LISN	AFJ	LS16	16010222119	2025.05.21
LISN(EUT)	Mestec	AN3016	04/10040	2025.05.21

NOTE: 1. The calibration interval of the above test instruments is 12 months and the calibrations are traceable to international system unit (SI).
2. N.C.R = No Calibration Request.

7.1.3. TEST PROCEDURES

Procedure of Preliminary Test

The EUT and Support equipment, if needed, was set up as per the test configuration to simulate typical usage per the user's manual. When the EUT is a tabletop system, a wooden table with a height of 0.8 meters is used and is placed on the ground plane as per EN55014-1 (see Test Facility for the dimensions of the ground plane used). When the EUT is a floor standing equipment, it is placed on the ground plane, which has a 3-12 mm non-conductive covering to insulate the EUT from the ground plane.

All I/O cables were positioned to simulate typical actual usage as per EN55014-1.

All support equipment power received from a second LISN.

The EUT test program was started. Emissions were measured on each current carrying line of the EUT using an EMI Test Receiver connected to the LISN powering the EUT.

The Receiver scanned from 150 kHz to 30MHz for emissions in each of the test modes.

During the above scans, the emissions were maximized by cable manipulation.

The test mode(s) described in Item 3.1 were scanned during the preliminary test.

After the preliminary scan, we found the test mode described in Item 3.1 producing the highest emission level.

The EUT configuration and cable configuration of the above highest emission levels were recorded for reference of the final test.

Procedure of Final Test

EUT and support equipment were set up on the test bench as per the configuration with highest emission level in the preliminary test.

A scan was taken on both power lines, Line 1 and Line 2, recording at least the six highest emissions. Emission frequency and amplitude were recorded into a computer in which correction factors were used to calculate the emission level and compare reading to the applicable limit.

The test data of the worst-case condition(s) was recorded.

7.1.4. TEST SETUP

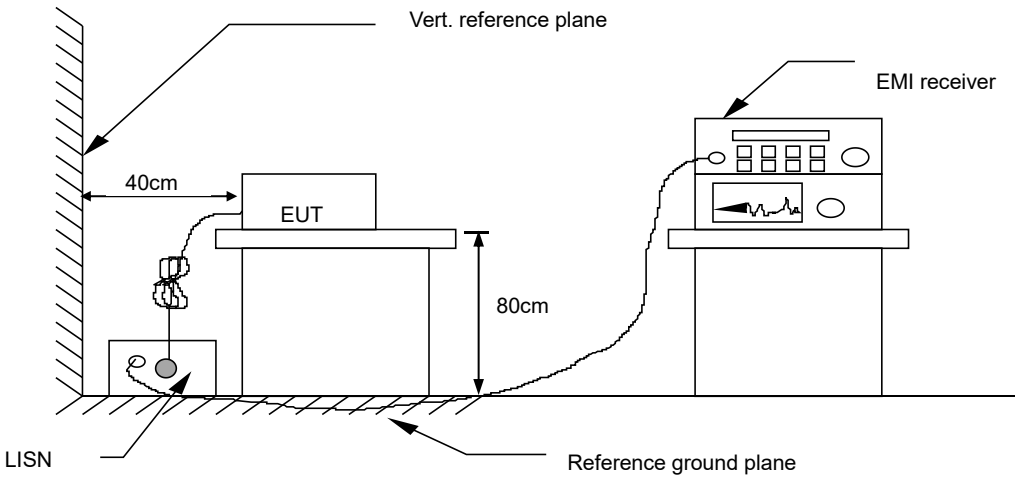

For the actual test configuration, please refer to the related item – Photographs of the Test Configuration.

7.1.5. TEST RESULTS

Test Mode	Working	**6dB Bandwidth**	10 KHz
Environmental Conditions	26°C,60% RH	**Test Result**	Pass
Detector Function	Peak / Quasi-peak/AV	**Test By**	Jeremy Zhang

NOTE:
L1 = Line One (Live Line) / L2 = Line Two (Neutral Line).
"---" denotes the emission level was or more than 2dB below the Average limit, so no re-check anymore.
Freq. = Emission frequency in MHz
Reading level(dBuV) = Receiver reading
Corr. Factor (dB) = attenuator + Cable loss
Level (dBuV) = Reading level(dBuV) + Corr. Factor (dB)
Limit (dBuV) = Limit stated in standard
Margin (dB) = Level (dBuV) – Limits (dBuV)
Q.P.=Quasi-Peak

Conducted Emission Measurement

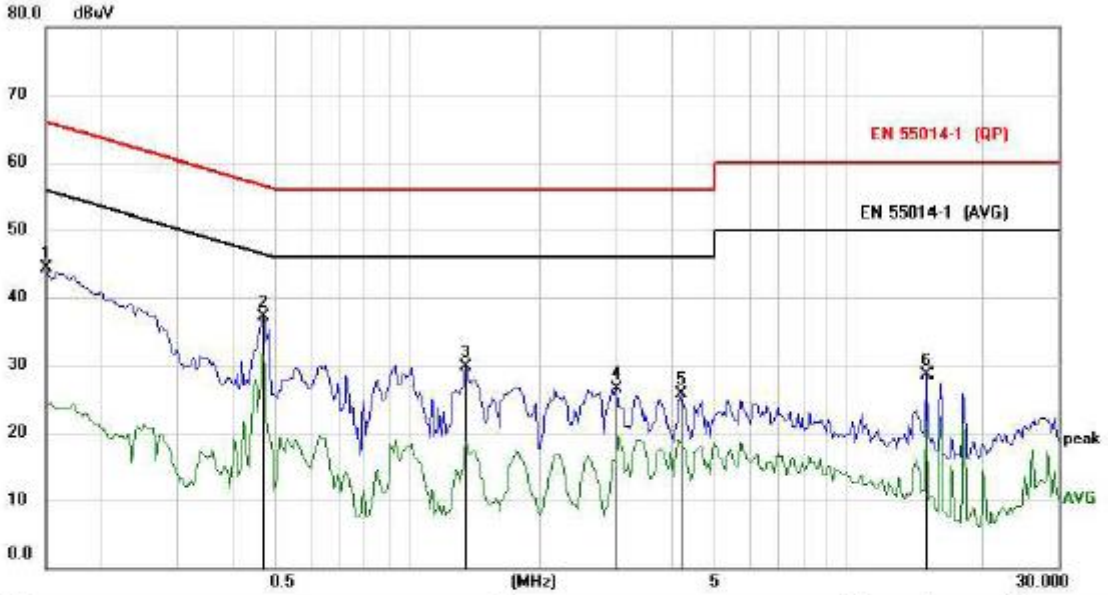

Site LAB Phase: N Temperature: 26

Limit: EN 55014-1 (QP) Power: Humidity: 60 %

No.	Mk.	Freq.	Reading Level	Correct Factor	Measure-ment	Limit	Over		
		MHz	dBuV	dB	dBuV	dBuV	dB	Detector	Comment
1		0.1500	33.77	10.57	44.34	66.00	-21.66	peak	
2	*	0.4697	26.27	10.77	37.04	56.52	-19.48	peak	
3		1.3548	18.55	11.15	29.70	56.00	-26.30	peak	
4		2.9968	15.24	11.34	26.58	56.00	-29.42	peak	
5		4.1855	14.19	11.49	25.68	56.00	-30.32	peak	
6		15.1485	16.02	12.42	28.44	60.00	-31.56	peak	

Hotline: 400-6655-351 Tel: 0755-23595200 Fax: 0755-23595201 http://www.httprc.com.

Conducted Emission Measurement

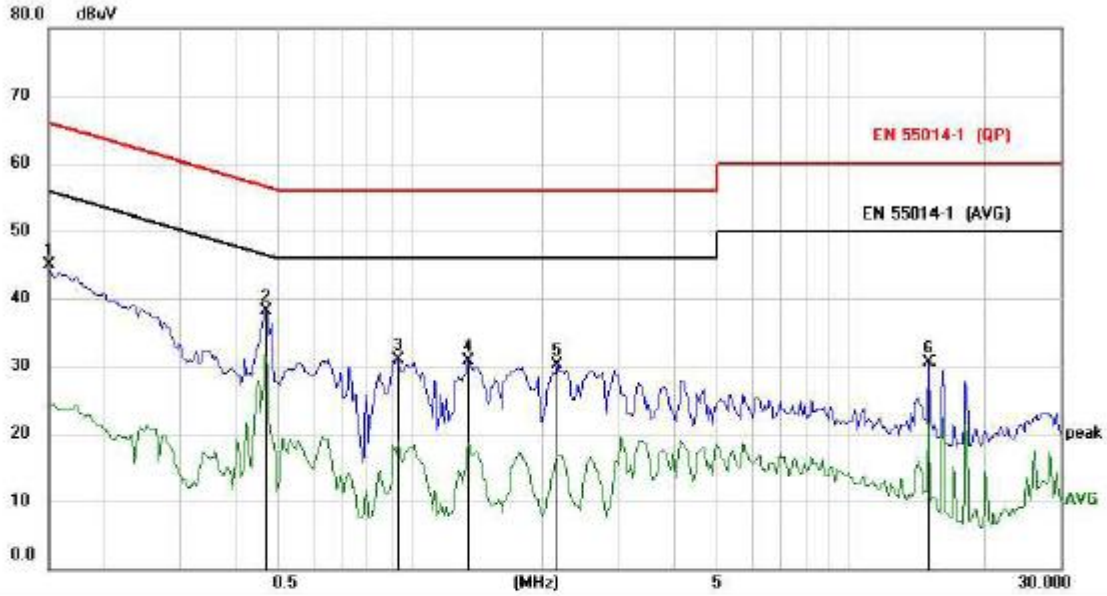

Site LAB Phase: L1 Temperature: 26

Limit: EN 55014-1 (QP) Power: Humidity: 60 %

No.	Mk.	Freq.	Reading Level	Correct Factor	Measure-ment	Limit	Over		
		MHz	dBuV	dB	dBuV	dBuV	dB	Detector	Comment
1		0.1500	34.27	10.57	44.84	66.00	-21.16	peak	
2	*	0.4698	27.27	10.77	38.04	56.52	-18.48	peak	
3		0.9417	19.76	11.06	30.82	56.00	-25.18	peak	
4		1.3550	19.55	11.15	30.70	56.00	-25.30	peak	
5		2.1585	18.80	11.25	30.05	56.00	-25.95	peak	
6		15.1485	18.02	12.42	30.44	60.00	-29.56	peak	

7.2. DISTURBANCE POWER MEASUREMENT

7.2.1. LIMITS

FREQUENCY (MHz)	Quasi-Peak (dBpW)	Average (dBpW)
30 ~ 300	45 – 55	35 – 45

NOTE: (1) The lower limit shall apply at the transition frequency.

7.2.2. TEST INSTRUMENTS

Shielding Room(843)				
Name of Equipment	**Manufacturer**	**Model**	**Serial Number**	**Calibration date**
EMI Test Receiver	R&S	ESCI	100005	2025.05.21
ABSORBING CLAMP	FCC	F-201-23mm	160	2025.05.21
CABLE	TIME MICROWAVE	LMR-400	N-TYPE04	2025.05.21

NOTE: 1. The calibration interval of the above test instruments is 12 months and the calibrations are traceable to international system unit (SI).

2. N.C.R = No Calibration Request.

7.2.3. TEST PROCEDURE

Procedure of Preliminary Test

The EUT is place on a 0.8 meters height wooden table above the ground plane, and kept at least 0.8 m from other metallic object. The straight portion of main lead would put on 6 m long testing bench of (if main lead is shorter than 6 m it should be extended) as per CISPR 14/EN 55014-1.

Any lead connecting the main appliance to an auxiliary apparatus is disconnected if this does not affect the operation of the appliance, or is isolated by means of ferrite rings (or an absorbing clamp) close to the appliance.

The EUT test program was started. Emissions were scanned and measured using a receiver connected to the absorbing clamp.

The absorbing clamp is positioned for maximum indication at each test frequency (30MHz to 300MHz), that means is clamp moved along the main lead until the maximum emission value is found.

The test mode(s) described in Item 3.1 were scanned during the preliminary test:

After the preliminary scan, we found the test mode described in Item 3.1 producing the highest emission level.

The EUT and cable configuration, antenna position, polarization and turntable position of the above highest emission level were recorded for the final test.

Procedure of Final Test

EUT and support equipment were set up on the wooden table as per step 6 of the preliminary test.

The receiver scanned from 30MHz to 300MHz. Emissions were scanned and measured to moving the absorbing clamp along the main lead until the maximum emission value is found.

Recorded at least the six highest emissions. Emission frequency, amplitude, antenna position, polarization and turntable position were recorded into a computer in which correction factors were used to calculate the emission level and compare reading to the applicable limit and only Q.P. reading is presented.

The test data of the worst-case condition(s) was recorded.

Hotline: 400-6655-351 Tel: 0755-23595200 Fax: 0755-23595201 http://www.httprc.com.

7.2.4. TEST SETUP

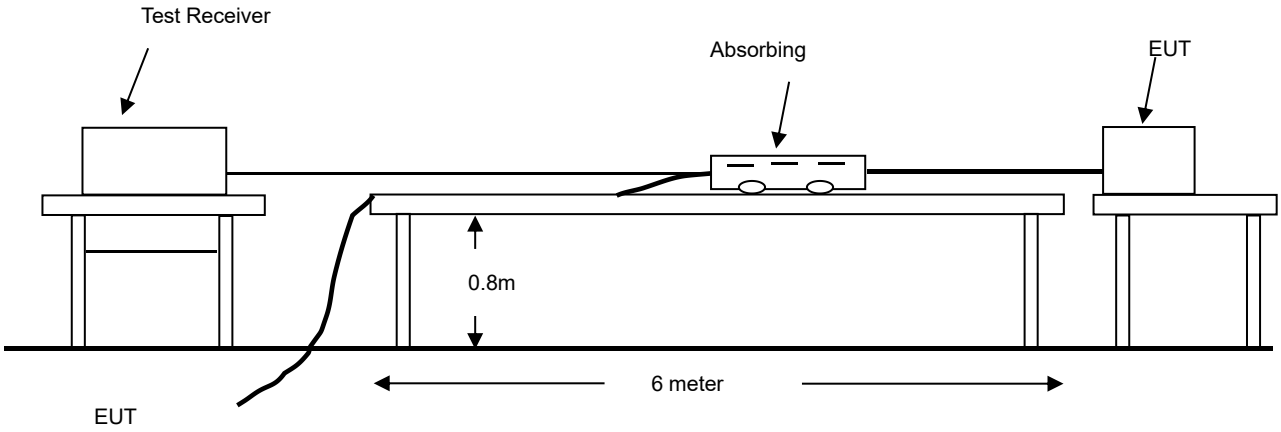

For the actual test configuration, please refer to the related item – Photographs of the Test Configuration.

7.2.5 TEST RESULTS

Test Mode	Working	**6dB Bandwidth**	120 KHz
Environmental Conditions	26°C, 60% RH	**Test Result**	Pass
Detector Function	Peak / Quasi-Peak/AV	**Test By**	Jeremy Zhang

Freq. = Emission frequency in MHz
Reading level(dBpW) = Receiver reading
Corr. Factor (dB) = Attenuator factor + Cable loss
Measurement (dBpW) = Reading level(dBpW) + Corr. Factor (dB)
Limit (dBpW) = Limit stated in standard
Margin (dB) = Measurement (dBpW) – Limits (dBpW)

Disturbance Power Measurement

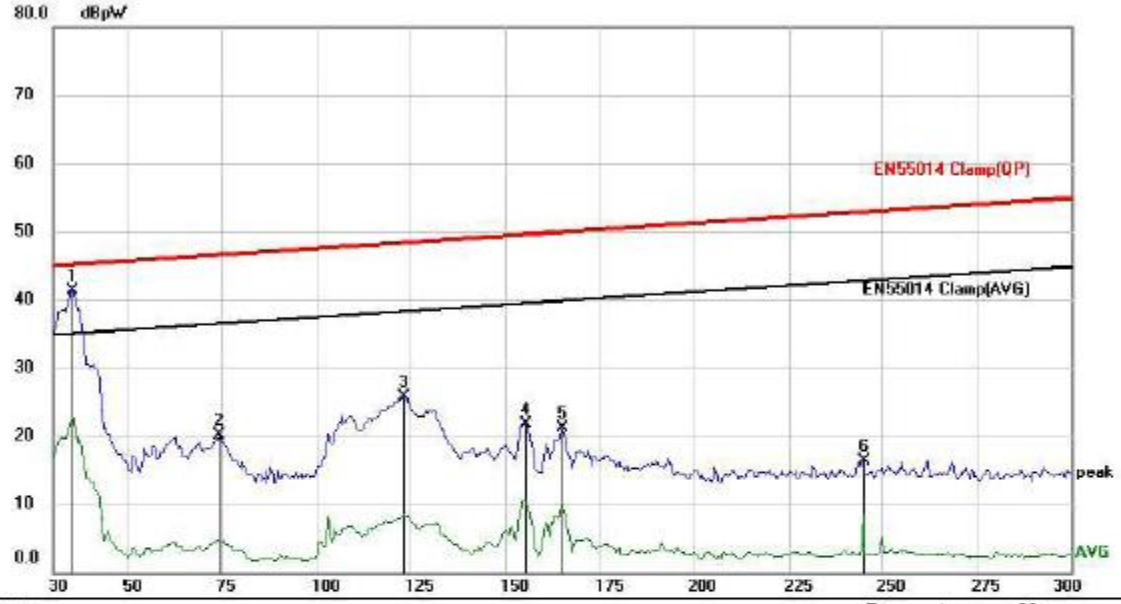

Site LAB
Limit: EN55014 Clamp(QP)

Temperature: 26
Humidity: 60 %

No.	Mk.	Freq.	Reading Level	Correct Factor	Measure-ment	Limit	Over		Position	
		MHz	dBpW	dB	dBpW	dBpW	dB	Detector	cm	Comment
1	*	35.2500	41.40	0.00	41.40	45.19	-3.79	peak		
2		74.1250	20.19	0.00	20.19	46.63	-26.44	peak		
3		123.2500	25.78	0.00	25.78	48.45	-22.67	peak		
4		155.5000	21.73	0.00	21.73	49.65	-27.92	peak		
5		165.0625	21.15	0.00	21.15	50.00	-28.85	peak		
6		245.0000	16.35	0.00	16.35	52.96	-36.61	peak		

7.3. HARMONICS CURRENT MEASUREMENT

7.3.1. LIMITS OF HARMONICS CURRENT MEASUREMENT

Limits for Class A equipment	
Harmonics Order n	Max. permissible harmonics current A
Odd harmonics	
3	2.30
5	1.14
7	0.77
9	0.40
11	0.33
13	0.21
15<=n<=39	0.15x15/n
Even harmonics	
2	1.08
4	0.43
6	0.30
8<=n<=40	0.23x8/n

Limits for Class D equipment		
Harmonics Order n	Max. permissible harmonics current per watt mA/W	Max. permissible harmonics current A
Odd Harmonics only		
3	3.4	0.23
5	1.9	1.14
7	1.0	0.77
9	0.5	0.40
11	0.35	0.33
13	0.30	0.21
15<=n<=39	3.85/n	0.15x15/n

NOTE: 1. Class A and Class D are classified according to item 4.4.3.

2. According to section 7 of EN IEC 61000-3-2, the above limits apply for all equipments with a rated power more than 75W, except for lighting equipment.

7.3.2. TEST INSTRUMENTS

Name of Equipment	Manufacturer	Model	Serial Number	Calibration date
Harmonic & Flicker Tester	California instruments	PACS-3	SB2588/01	2025.05.21
AC Power Source	California instruments	5001iX-CTS-40	SB2588	2025.05.21

NOTE: 1. The calibration interval of the above test instruments is 12 months and the calibrations are traceable to international system unit (SI).

Hotline: 400-6655-351 Tel: 0755-23595200 Fax: 0755-23595201 http://www.httprc.com.

7.3.3. TEST PROCEDURE

The EUT was placed on the top of a wooden table 0.8 meters above the ground and operated to produce the maximum harmonic components under Standard Mode operating conditions for each successive harmonic component in turn.

The classification of EUT is according to section 5 of EN IEC 61000-3-2.

The EUT is classified as follows:

Class A: Balanced three-phase equipment, Household appliances excluding equipment as Class D, Tools excluding portable tools, Dimmers for incandescent lamps, audio equipment, equipment not specified in one of the three other classes.

Class B: Portable tools; Arc welding equipment which is not professional equipment.

Class C: Lighting equipment.

Class D: Equipment having a specified power less than or equal to 600 W of the following types: Personal computers and personal computer monitors and television receivers.

The correspondent test program of test instrument to measure the current harmonics emanated from EUT is chosen. The measure time shall be not less than the time necessary for the EUT to be exercised.

7.3.4. TEST SETUP

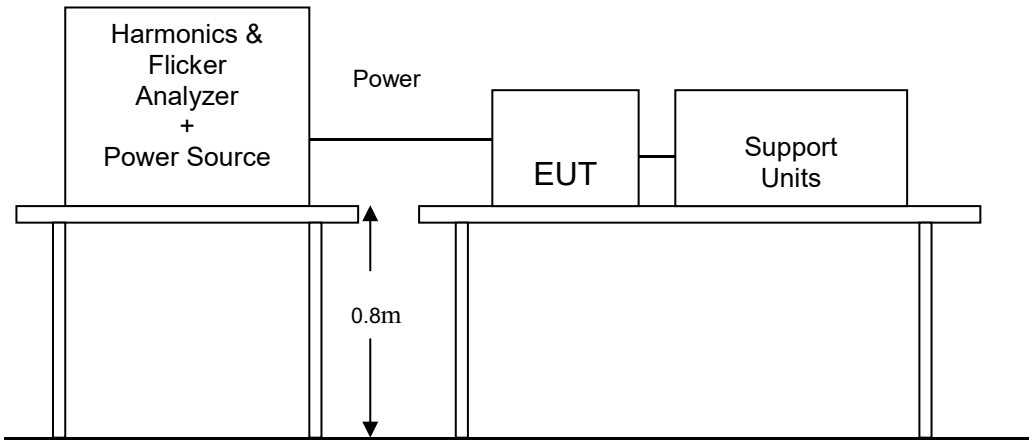

For the actual test configuration, please refer to the related item .

7.3.5. TEST RESULTS

POWER CONSUMPTION	Rated power exceeding 75W	**Test Mode**	Working
ENVIRONMENTAL CONDITIONS	24.5deg.C, 56% RH, 992 hPa	**Limits**	Class ☒ A □ B □ C □ D
Test Result	Pass	**Tested by**	Jeremy Zhang

NOTE: 1. Limits classified according to item 7.3.1.

2. There is no need for Harmonics test to be performed on this product(rated power is less than 75W) in accordance with EN IEC 61000-3-2.

For further details, please refer to Clause 7 of EN IEC 61000-3-2 which states:

"For the following categories of equipment, limits are not specified in this edition of the standard: equipment with a rated power of 75W or less, other than lighting equipment."

7.4. VOLTAGE FLUCTUATION AND FLICKS MEASUREMENT

7.4.1. LIMITS OF VOLTAGE FLUCTUATION AND FLICKS MEASUREMENT

TEST ITEM	LIMIT	REMARK
P_{st}	1.0	P_{st} means short-term flicker indicator.
P_{lt}	0.65	P_{lt} means long-term flicker indicator.
T_{dt} (ms)	500	T_{dt} means maximum time that dt exceeds 3 %.
d_{max} (%)	4%	d_{max} means maximum relative voltage change.
dc (%)	3.3%	dc means relative steady-state voltage change

7.4.2. TEST INSTRUMENTS

IMMUNITY SHIELDED ROOM				
Name of Equipment	**Manufacturer**	**Model**	**Serial Number**	**Calibration date**
Harmonic & Flicker Tester	California instruments	PACS-3	SB2588/01	2025.05.21
AC Power Source	California instruments	5001iX-CTS-40	SB2588	2025.05.21

NOTE: The calibration interval of the above test instruments is 12 months and the calibrations are traceable to international system unit (SI).

7.4.3. TEST PROCEDURE

The EUT was placed on the top of a wooden table 0.8 meters above the ground and operated to produce the most unfavorable sequence of voltage changes under Standard Mode operating conditions.

During the flick measurement, the measure time shall include that part of whole operation cycle in which the EUT produce the most unfavorable sequence of voltage changes. The observation period for short-term flicker indicator is 10 minutes and the observation period for long-term flicker indicator is 2 hours.

7.4.4. TEST SETUP

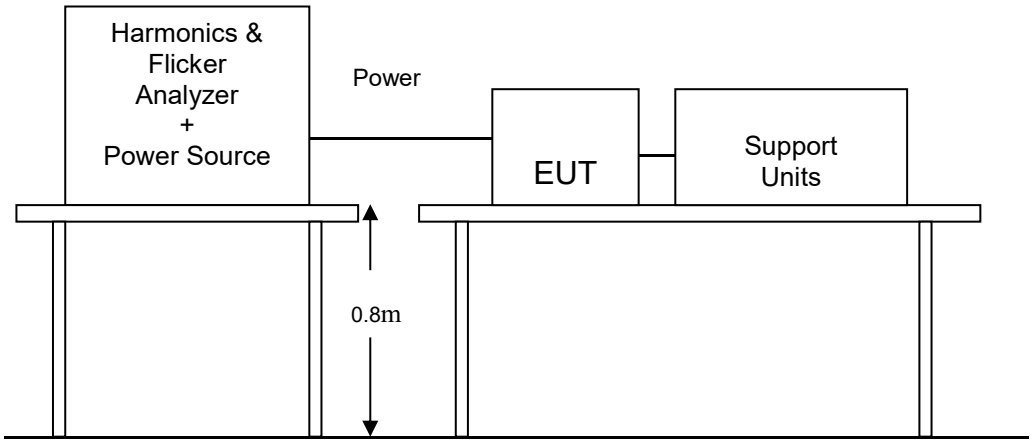

For the actual test configuration, please refer to the related item .

7.4.5. TEST RESULTS

OBSERVATION PERIOD (Tp)	10mins	**Test Mode**	Working
ENVIRONMENTAL CONDITIONS	24.5deg.C, 56% RH, 992 hPa	**Tested by:**	Jeremy Zhang
Test Result	Pass		

8 IMMUNITY TEST

8.1. GENERAL DESCRIPTION

Product Standard	EN IEC 55014-2：2021	
	Test Type	Minimum Requirement
Basic Standard, Specification, and Performance Criterion required	EN 61000-4-2	Electrostatic Discharge – ESD: 8kV air discharge, 4kV Contact discharge, Performance Criterion B
	EN 61000-4-3	Radio-Frequency Electromagnetic Field Susceptibility Test – RS: 80 ~1000 MHz, 3V/m, 80% AM(1kHz), Performance Criterion A
	EN 61000-4-4	Electrical Fast Transient/Burst - EFT, Power line: 1kV, Signal line: 0.5kV, Performance Criterion B
	EN 61000-4-5	Surge Immunity Test: 1.2/50 us Open Circuit Voltage, 8 /20 us Short Circuit Current, Power Port ~ Line to line: 1kV, Line to ground: 2kV Signal Port ~ Lines to ground : 1kV Performance Criterion B
	EN 61000-4-6	Conducted Radio Frequency Disturbances Test –CS: 0.15 ~ 80 MHz, 3Vrms, 80% AM, 1kHz, Performance Criterion A
	EN 61000-4-8	Power frequency magnetic field immunity test 50 Hz, 1A/m Performance Criterion A
	EN IEC 61000-4-11	Voltage Dips: i) 30% reduction for 50 period, Performance Criterion C ii) 60% reduction for 10 period, Performance Criterion C Voltage Interruptions: 100% reduction for 0.5 period Performance Criterion C

8.2. GENERAL PERFORMANCE CRITERIA DESCRIPTION

Criteria A:	The apparatus shell continues to operate as intended without operator intervention. No degradation of performance or loss of function is allowed below a performance level specified by the manufacturer, when the apparatus is used as intended. The performance level may be replaced by a permissible loss of performance. If the manufacturer does not specify the minimum performance level or the permissible performance loss, then either of these may be derived from the product description and documentation, and by what the user may reasonably expect from the equipment if used as intended.
Criteria B:	After test, the apparatus shell continues to operate as intended without operator intervention. No degradation of performance or loss of function is allowed, after the application of the phenomenon below a performance level specified by the manufacturer, when the apparatus is used as intended. The performance level may be replaced by a permissible loss of performance. During the test, degradation of performance is however allowed. However, no change of operating state if stored data is allowed to persist after the test. If the manufacturer does not specify the minimum performance level or the permissible performance loss, then either of these may be derived from the product description and documentation, and by what the user may reasonably expect from the equipment if used as intended.
Criteria C:	Temporary loss of function is allowed, provided the functions is self-recoverable or can be restored by the operation of controls by the user in accordance with the manufacturer instructions. Functions, and/or information stored in non-volatile memory, or protected by a battery backup, shall not be lost.

8.3. ELECTROSTATIC DISCHARGE (ESD)

8.3.1. TEST SPECIFICATION

Basic Standard:	EN 61000-4-2
Discharge Impedance:	330 ohm
Charging Capacity:	150pF
Discharge Voltage:	Air Discharge: 8 kV (Direct) Contact Discharge: 4 kV (Direct/Indirect)
Polarity:	Positive & Negative
Number of Discharge:	Minimum 10 times at each test point
Discharge Mode:	1 time/s
Performance Criterion:	B

8.3.2. TEST INSTRUMENT

IMMUNITY SHIELDED ROOM				
Name of Equipment	**Manufacturer**	**Model**	**Serial Number**	**Calibration date**
ESD 2000	EMC PARTNER	ESD2000	182	2025.05.21

NOTE: The calibration interval of the above test instruments is 12 months and the calibrations are traceable to international system unit (SI).

8.3.3. TEST PROCEDURE

The discharges shall be applied in two ways:

a) Contact discharges to the conductive surfaces and coupling planes:
Twenty dischargers (10 with positive and 10 with negative polarity) shall be applied on each accessible metallic part of the enclosure, terminals are excluded. In case of a non-conductive enclosure, dischargers shall be applied on the horizontal or vertical coupling planes. Test shall be performed at a maximum repetition rate of one discharge per second.

b) Air discharges at slots and apertures and insulating surfaces:
On those parts of the EUT where it is not possible to perform contact discharge testing, the equipment should be investigated to identify user accessible points where breakdown may occur. Such points are tested using the air discharge method. This investigation should be restricted to those area normally handled by the user. A minimum of 10 single air discharges shall be applied to the selected test point for each such area.

The basic test procedure was in accordance with IEC 61000-4-2:

a) The EUT was located 0.1 m minimum from all side of the **HCP** (dimensions 1.6m x 0.8m).
b) The support units were located another table 30 cm away from the EUT, but direct support unit was/were located at same location as EUT on the HCP and keep at a distance of 10 cm with EUT.
c) The time interval between two successive single discharges was at least 1 second.
d) Contact discharges were applied to the non-insulating coating, with the pointed tip of the generator penetrating the coating and contacting the conducting substrate.
e) Air discharges were applied with the round discharge tip of the discharge electrode approaching the EUT as fast as possible (without causing mechanical damage) to touch the EUT. After each discharge, the ESD generator was removed from the EUT and re-triggered for a new single discharge. The test was repeated until all discharges were complete.
f) At least ten single discharges (in the most sensitive polarity) were applied at the front edge of each **HCP** opposite the center point of each unit of the EUT and 0.1 meters from the front of the EUT. The long axis of the discharge electrode was in the plane of the **HCP** and perpendicular to its front edge during the discharge.
g) At least ten single discharges (in the most sensitive polarity) were applied to the center of one vertical edge of the **V**ertical **C**oupling **P**lane (**VCP**) in sufficiently different positions that the four faces of the EUT were completely illuminated. The **VCP** (dimensions 0.5m x 0.5m) was placed vertically to and 0.1 meters from the EUT.

8.3.4. TEST SETUP

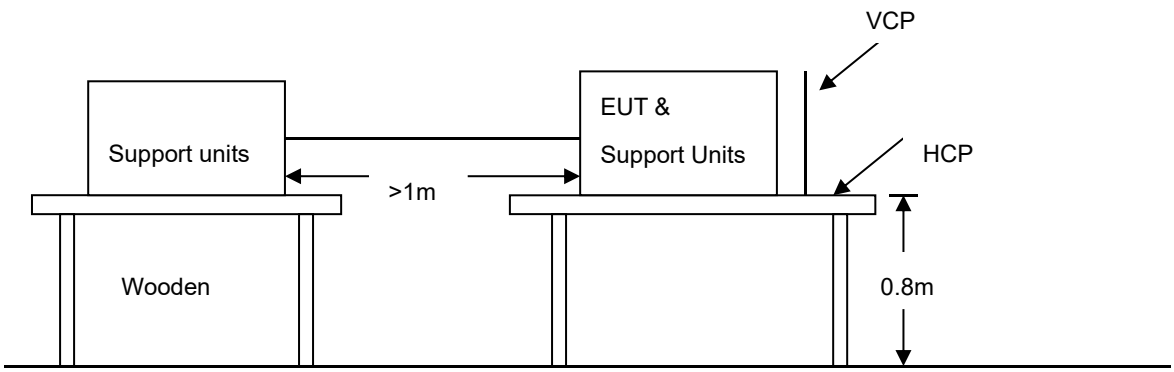

Ground Reference

For the actual test configuration, please refer to the related item – Photographs of the Test Configuration.

NOTE:

TABLE-TOP EQUIPMENT

The configuration consisted of a wooden table 0.8 meters high standing on the **G**round **R**eference **P**lane. The **GRP** consisted of a sheet of aluminum at least 0.25mm thick, and 2.5 meters square connected to the protective grounding system. A **H**orizontal **C**oupling **P**lane (1.6m x 0.8m) was placed on the table and attached to the **GRP** by means of a cable with 940k total impedance. The equipment under test, was installed in a representative system as described in section 7 of EN 61000-4-2, and its cables were placed on the **HCP** and isolated by an insulating support of 0.5mm thickness. A distance of 1-meter minimum was provided between the EUT and the walls of the laboratory and any other metallic structure.

FLOOR-STANDING EQUIPMENT

The equipment under test was installed in a representative system as described in section 7 of IEC 61000-4-2, and its cables were isolated from the Ground Reference Plane by an insulating support of 0.1-meter thickness. The GRP consisted of a sheet of aluminum that is at least 0.25mm thick, and 2.5 meters square connected to the protective grounding system and extended at least 0.5 meters from the EUT on all sides.

8.3.5. TEST RESULTS

Temperature:	25°C	**Humidity**	55% RH
Pressure	996mbar	**Test result**	Pass
Test mode	Working	**Test By**	Jeremy Zhang

Air Discharge						
Test locations		**Test Levels**	**Results**			
		± 8 kV	**Pass**	**Fail**	**Performance Criterion**	**Observation**
Slot	6Points	☒	☒	☐	**B**	**Note** ☐ **1** ☒ **2**

Contact Discharge						
Test locations		**Test Levels**	**Results**			
		± 4 kV	**Pass**	**Fail**	**Performance Criterion**	**Observation**
HCP	4Points	☒	☒	☐	**B**	**Note** ☐ **1** ☒ **2**
VCP	4Points	☒	☒	☐	**B**	**Note** ☐ **1** ☒ **2**
Metal	4Points	☒	☒	☐	**B**	**Note** ☐ **1** ☒ **2**

NOTE: *1. There was no change compared with initial operation during the test.*
2. The loss of function of the EUT during the test and it was recovered by itself operation after the test.

8.4. RADIATED, RADIO-FREQUENCY, ELECTROMAGNETIC FIELD (RS)

8.4.1. TEST SPECIFICATION

Basic Standard:	EN 61000-4-3
Frequency Range:	80 MHz ~1000 MHz, 1800 MHz, 2600 MHz, 3500 MHz, 5000 MHz
Field Strength:	3 V/m
Modulation:	1kHz Sine Wave, 80%, AM Modulation
Frequency Step:	1 % of preceding frequency value
Polarity of Antenna:	Horizontal and Vertical
Test Distance:	3 m
Antenna Height:	1.5m
Performance Criterion:	A

8.4.2. TEST INSTRUMENT

743 RS Chamber				
Name of Equipment	**Manufacturer**	**Model**	**Serial Number**	**Calibration date**
Signal Generator	Maconi	2022D	119246/003	2025.05.21
Power Amplifier	M2S	A00181-1000	9801-112	2025.05.21
Power Amplifier	M2S	AC8113/ 800-250A	9801-179	2025.05.21
Power Antenna	SCHAFFNER	CBL6140A	1204	2025.05.21

NOTE: 1. The calibration interval of the above test instruments is 12 months and the calibrations are traceable to international system unit (SI).
2. N.C.R.= No Calibration required

8.4.3. TEST PROCEDURE

The test procedure was in accordance with EN 61000-4-3

a) The testing was performed in a fully anechoic chamber. The transmit antenna was located at a distance of 3 meters from the EUT.

b) The frequency range is swept from 80 MHz to 1000 MHz, with the signal 80% amplitude modulated with a 1kHz sine-wave. The rate of sweep did not exceed 1.5 x 10^{-3} decade/s, where the frequency range is swept incrementally, the step size was 1% of preceding frequency value.

c) The dwell time at each frequency shall be not less than the time necessary for the EUT

to be able to respond.

d) The test was performed with the EUT exposed to both vertically and horizontally polarized fields on each of the four sides.

8.4.4. TEST SETUP

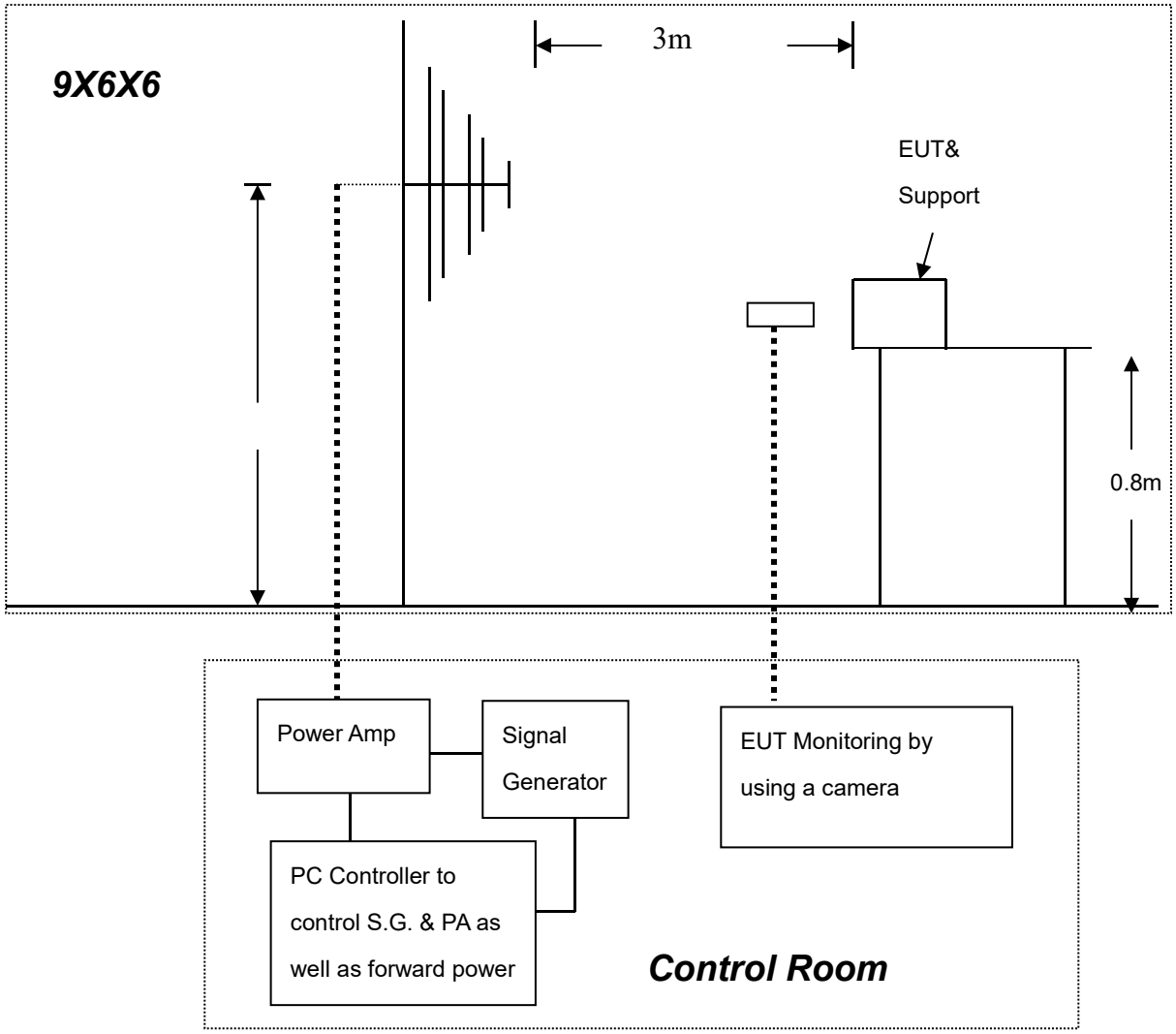

For the actual test configuration, please refer to the related item .

NOTE:

TABLETOP EQUIPMENT

The EUT installed in a representative system as described in section 7 of EN 61000-4-3 was placed on a non-conductive table 0.8 meters in height. The system under test was connected to the power and signal wire according to relevant installation instructions.

FLOOR STANDING EQUIPMENT

The EUT installed in a representative system as described in section 7 of IEC 61000-4-3 was placed on a non-conductive wood support 0.1 meters in height. The system under test was connected to the power and signal wire according to relevant installation instructions

8.4.5. TEST RESULTS

Temperature:	25°C	Humidity	50% RH
Pressure	996mbar	Test result	Pass
Test mode	Working	Test By	Jeremy Zhang

Frequency (MHz)	Polarity	Postion	Field Strength (V/m)	Observation	Result
80 ~ 1000	V&H	Front	3	Note	Pass
80 ~ 1000	V&H	Rear	3	Note	Pass
80 ~ 1000	V&H	Left	3	Note	Pass
80 ~ 1000	V&H	Right	3	Note	Pass

NOTE: 1.There was no change compared with the initial operation during the test.

8.5. ELECTRICAL FAST TRANSIENT (EFT)

8.5.1. TEST SPECIFICATION

Basic Standard:	EN 61000-4-4
Test Voltage:	Power Line: 1 kV Signal/Control Line: 0.5 kV
Polarity:	Positive & Negative
Impulse Frequency:	5 kHz
Impulse Wave-shape:	5/50 ns
Burst Duration:	15 ms
Burst Period:	300 ms
Test Duration:	Not less than 1 min.
Performance criterion:	B

8.5.2. TEST INSTRUMENT

Immunity Shield Room				
Equipment	**Manufacturer**	**Model**	**Serial Number**	**Calibration date**
EFT Tester	LIONCEL	LSE-545CB	0180601	2025.05.21
Specialized Isolated Voltage Regulator For Surge	EVERFINE	GT2502	P185365CM5391123	2025.05.21
Coupling Clamp	LIONCEL	EFTC	018071809	2025.05.21

NOTE: 1. The calibration interval of the above test instruments is 12 months and the calibrations are traceable to international system unit (SI).

2. N.C.R.= No Calibration required

8.5.3. TEST PROCEDURE

a) Both positive and negative polarity discharges were applied.

b) The length of the “hot wire” from the coaxial output of the EFT generator to the terminals on the EUT should not exceed 1 meter.

c) The duration time of each test sequential was 1 minute.

d) The transient/burst waveform was in accordance with EN 61000-4-4, 5/50ns.

8.5.4. TEST SETUP

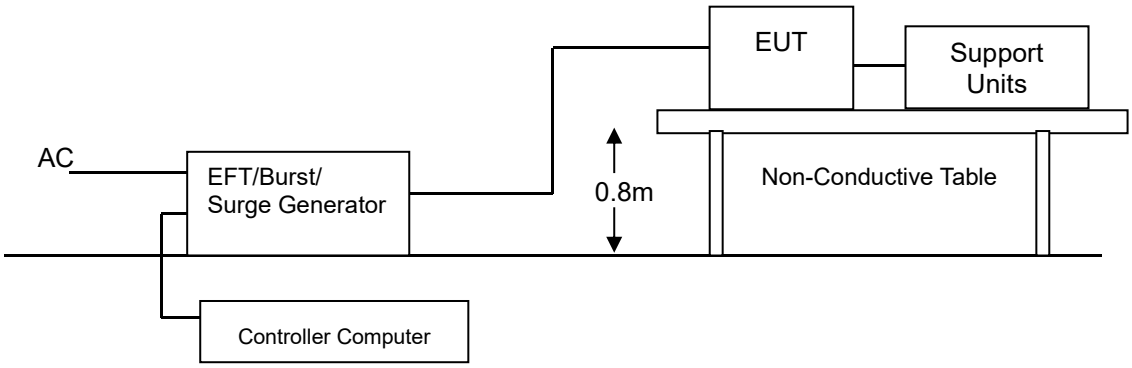

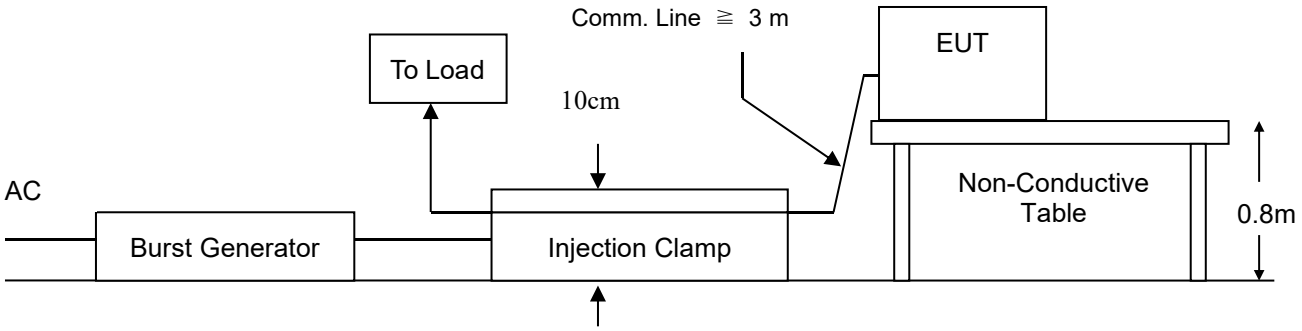

For the actual test configuration, please refer to the related item – Photographs of the Test Configuration.

NOTE:

TABLETOP EQUIPMENT

The configuration consisted of a wooden table (0.8m high) standing on the Ground Reference Plane. The GRP consisted of a sheet of aluminum (at least 0.25mm thick and 2.5m square) connected to the protective grounding system. A minimum distance of 0.5m was provided between the EUT and the walls of the laboratory or any other metallic structure.

FLOOR STANDING EQUIPMENT

The EUT installed in a representative system as described in section 7 of IEC 61000-4-4 and its cables, were isolated from the Ground Reference Plane by an insulating support that is 0.1-meter thick. The GRP consisted of a sheet of aluminum (at least 0.25mm thick and 2.5m square) connected to the protective grounding system.

8.5.5. TEST RESULTS

Temperature:	25°C	Humidity	50% RH
Pressure	996mbar	Test result	Pass
Test mode	Working	Test By	Jeremy Zhang

Test Point	Polarity	Test Level (kV)	Performance Criterion	Observation	Result
L	+/-	1	B	Note ☐1 ☒2	Pass
N	+/-	1	B	Note ☐1 ☒2	Pass
L – N	+/-	1	B	Note ☐1 ☒2	Pass
PE	+/-	1	B	Note ☐1 ☒2	N/A
L – PE	+/-	1	B	Note ☐1 ☒2	N/A
N – PE	+/-	1	B	Note ☐1 ☒2	N/A
L – N – PE	+/-	1	B	Note ☐1 ☒2	N/A
Signal Line	--	--	--	Note ☐1 ☐2	N/A

NOTE: 1. There was no change compared with initial operation during the test.
2. The loss of function of the EUT during the test and it was recovered by itself operation after the test.

8.6. SURGE IMMUNITY TEST

8.6.1. TEST SPECIFICATION

Basic Standard:	EN 61000-4-5
Wave-Shape:	Combination Wave 1.2/50 us Open Circuit Voltage 8/20 us Short Circuit Current
Test Voltage:	Power line ~ line to line: 1 kV; line to ground: 2kV Telecommunication line: 1 kV;
Surge Input/Output:	Power Line: L-N / L-PE / N-PE Telecommunication line: T-Ground / R-Ground
Generator Source Impedance:	2 ohm between networks 12 ohm between network and ground
Polarity:	Positive/Negative
Phase Angle:	0 /90 /180 /270
Pulse Repetition Rate:	1 time / min. (maximum)
Number of Tests:	5 positive and 5 negative at selected points
Performance Criterion:	B

8.6.2. TEST INSTRUMENT

Immunity Shield Room				
Equipment	**Manufacturer**	**Model**	**Serial Number**	**Calibration date**
Surge Tester	LIONCEL	LSE-545CB	0180601	2025.05.21
Specialized Isolated Voltage Regulator For Surge	EVERFINE	GT2502	P185365CM5391123	2025.05.21

NOTE: 1. The calibration interval of the above test instruments is 12 months and the calibrations are traceable to international system unit (SI).
2. N.C.R.= No Calibration required

8.6.3. TEST PROCEDURE

a) For EUT power supply:

The surge is applied to the EUT power supply terminals via the capacitive coupling network. Decoupling networks are required in order to avoid possible adverse effects on equipment not under test that may be powered by the same lines, and to provide sufficient decoupling impedance to the surge wave. The power cord between the EUT and the coupling/decoupling networks was shorter than 2 meters in length.

b) For test applied to unshielded un-symmetrically operated interconnection lines of EUT:

The surge was applied to the lines via the capacitive coupling. The coupling / decoupling networks didn't influence the specified functional conditions of the EUT. The interconnection line between the EUT and the coupling/decoupling networks was shorter than 2 meters in length.

c) For test applied to unshielded symmetrically operated interconnection / telecommunication lines of EUT:

The surge was applied to the lines via gas arrestors coupling. Test levels below the ignition point of the coupling arrestor were not specified. The interconnection line between the EUT and the coupling/decoupling networks was shorter than 2 meters in length.

8.6.4. TEST SETUP

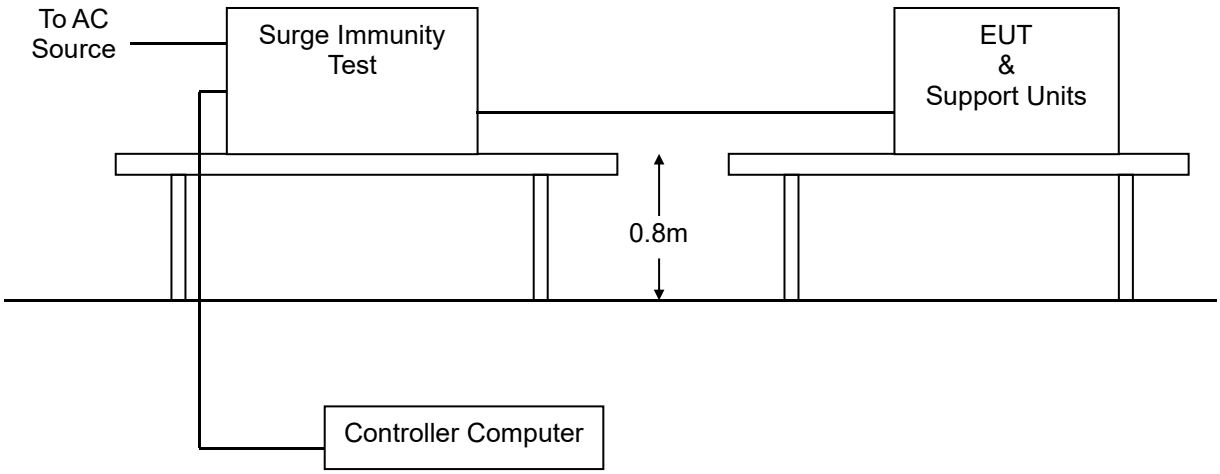

For the actual test configuration, please refer to the related item – Photographs of the Test Configuration.

8.6.5. TEST RESULTS

Temperature:	25°C	Humidity	50% RH
Pressure	996mbar	Test result	Pass
Test mode	Working	Test By	Jeremy Zhang

Test Point	Polarity	Test Level (kV)	Performance Criterion	Observation	Result
L - N	+/-	1	B	Note ☐1 ☒2	Pass
L - PE	+/-	2	B	Note ☐1 ☒2	N/A
N - PE	+/-	2	B	Note ☐1 ☒2	N/A

NOTE: 1. There was no change compared with initial operation during the test.
2. The loss of function of the EUT during the test and it was recovered by itself operation after the test.

8.7. CONDUCTED RADIO FREQUENCY DISTURBANCES (CS)

8.7.1. TEST SPECIFICATION

Basic Standard:	EN 61000-4-6
Frequency Range:	0.15 MHz ~ 80 MHz
Field Strength:	3 V
Modulation:	1kHz Sine Wave, 80%, AM Modulation
Frequency Step:	1 % of preceding frequency value
Coupled cable:	Power Mains, Shielded
Coupling device:	CDN-M3/2 (2 wires)
Performance criterion:	A

8.7.2. TEST INSTRUMENT

CS Test				
Name of Equipment	**Manufacturer**	**Model**	**Serial Number**	**Calibration date**
Signal Generator	Maconi	2022D	119246/003	2025.05.21
Power Amplifier	M2S	A00181-1000	9801-112	2025.05.21
CDN	MEB	M3-8016	003683	2025.05.21

NOTE: 1. The calibration interval of the above test instruments is 12 months and the calibrations are traceable to international system unit (SI).
2. N.C.R.= No Calibration required

8.7.3. TEST PROCEDURE

The EUT shall be tested within its intended operating and climatic conditions.

The test shell performed with the test generator connected to each of the coupling and decoupling devices in turn, while the other non-excited RF input ports of the coupling devices are terminated by a 50-ohm load resistor.

The frequency range was swept from 150 kHz to 80 MHz, using the signal level established during the setting process and with a disturbance signal of 80 % amplitude. The signal was modulated with a 1 kHz sine wave, pausing to adjust the RF signal level or the switch coupling devices as necessary. The sweep rate was 1.5 x 10^{-3} decades/s. Where the frequency range is swept incrementally, the step size was 1 % of preceding frequency value from 150 kHz to 80 MHz.

The dwell time at each frequency was less than the time necessary for the EUT to be exercised, and able to respond. Sensitive frequencies such as clock frequency(ies) and harmonics or frequencies of dominant interest, was analyzed separately.

Attempts was made to fully exercise the EUT during testing, and to fully interrogate all exercise modes selected for susceptibility.

8.7.4. TEST SETUP

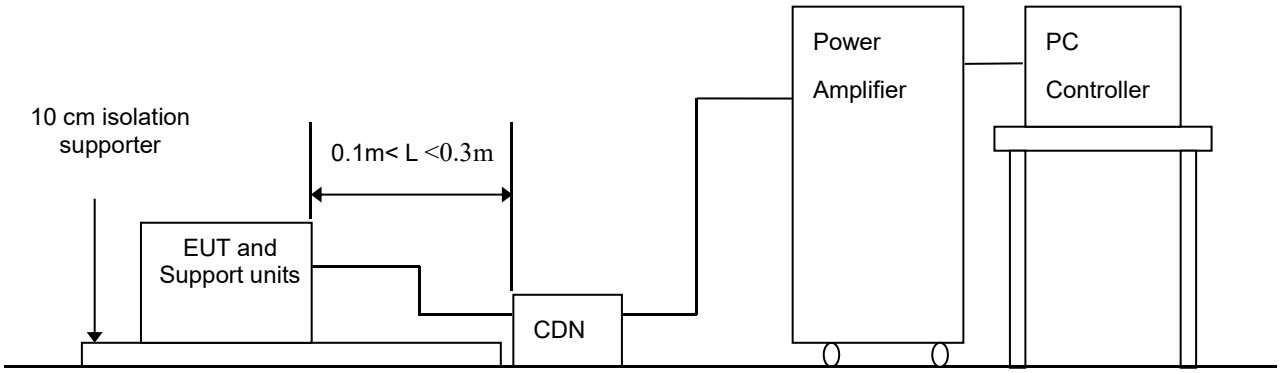

Note: 1. The EUT is setup 0.1m above Ground Reference Plane
2. The CDNS and / or EM clamp used for real test depends on ports and cables configuration of EUT.

For the actual test configuration, please refer to the related item .

NOTE:

TABLE-TOP AND FLOOR-STANDING EQUIPMENT

The equipment to be tested is placed on an insulating support of 0.1 meters height above a ground reference plane. All relevant cables shall be provided with the appropriate coupling and decoupling devices at a distance between 0.1 meters and 0.3 meters from the projected geometry of the EUT on the ground reference plane.

8.7.5. TEST RESULTS

Temperature:	25°C	Humidity	50% RH
Pressure	996mbar	Test result	Pass
Test mode	Working	Test By	Jeremy Zhang

Frequency Band (MHz)	Field Strength (Vrms)	Injected Position	Injection Method	Performance Criterion	Observation	Result
0.15 ~ 80	3	AC Mains	CDN-M2	**A**	**Note** ☒**1** ☐**2**	Pass
0.15 ~ 80	3	DC Mains	CDN-M2	**A**	**Note** ☒**1** ☐**2**	N/A

NOTE: 1. There was no change compared with initial operation during the test.
2. The loss of function of the EUT during the test and it was recovered by itself operation after the test.
3. N/A means to no applicable.

8.8. POWER FREQUENCY MAGNETIC FIELD

8.8.1. TEST SPECIFICATION

Basic Standard:	EN 61000-4-8
Frequency Range:	50Hz
Field Strength:	1A/m
Observation Time:	5 minutes
Inductance Coil:	Rectangular type, 1mx1m
Performance criterion:	A

8.8.2. TEST INSTRUMENT

Immunity Shield Room				
Name of Equipment	**Manufacturer**	**Model**	**Serial Number**	**Calibration date**
Power-frequency Magnetic field	SCHAFFNER	CCN 1000-1	72046	2025.05.21
Induction Coil Interface	SCHAFFNER	INA2141	6003	2025.05.21

NOTE: 1. The calibration interval of the above test instruments is 12 months and the calibrations are traceable to international system unit (SI).

2. N.C.R.= No Calibration required

8.8.3. TEST PROCEDURE

a. The equipment is configured and connected to satisfy its functional requirements. It shall be placed on the GRP with the interposition of a 0.1m-thick insulating support.

b. The equipment cabinets shall be connected to the safety earth directly on the GRP via the earth terminal of the EUT.

c. The power supply, input and output circuits shall be connected to the sources of power supply, control and signal.

d. The cables supplied or recommended by the equipment manufacturer shall be used. 1 meter of all cables used shall be exposed to the magnetic field.

8.8.4. TEST SETUP

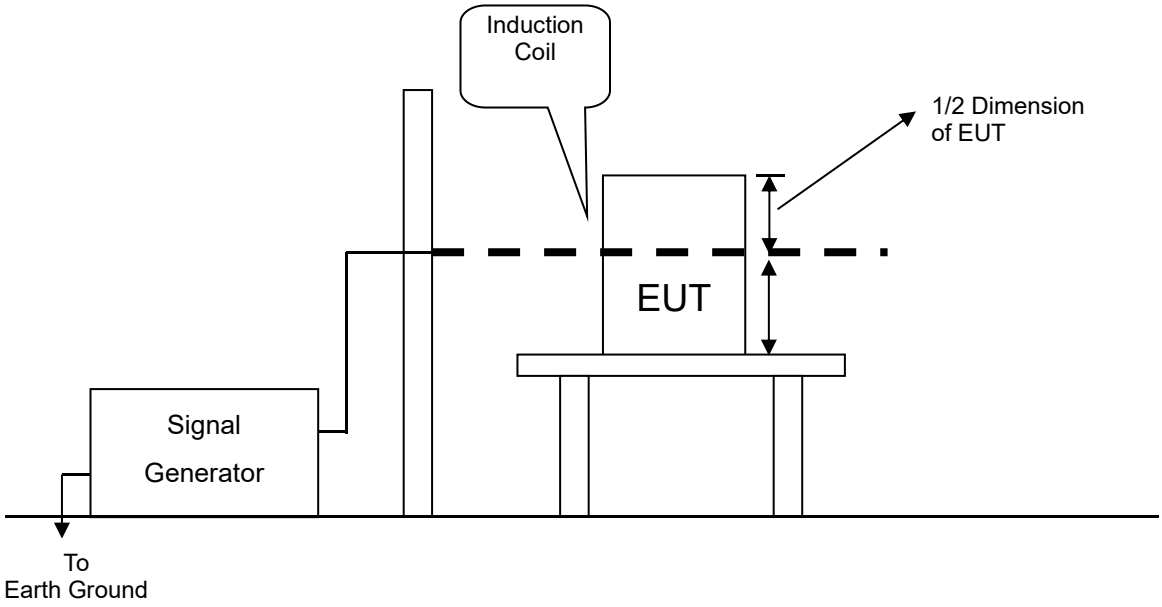

For the actual test configuration, please refer to the related item .

NOTE:

TABLETOP EQUIPMENT

The equipment shall be subjected to the test magnetic field by using the induction coil of standard dimension (1 m x 1 m). The induction coil shall then be rotated by 90 degrees in order to expose the EUT to the test field with different orientations.

FLOOR-STANDING EQUIPMENT

The equipment shall be subjected to the test magnetic field by using induction coils of suitable dimensions. The test shall be repeated by moving and shifting the induction coils, in order to test the whole volume of the EUT for each orthogonal direction. The test shall be repeated with the coil shifted to different positions along the side of the EUT, in steps corresponding to 50 % of the shortest side of the coil. The induction coil shall then be rotated by 90 degrees in order to expose the EUT to the test field with different orientations.

8.8.5. TEST RESULTS

Temperature:	25°C	**Humidity**	50% RH
Pressure	996mbar	**Test result**	Pass
Test mode	Working	**Test By**	Jeremy Zhang

DIRECTION	Field Strength (A/m)	Performance Criterion	OBSERVATION	RESULTS
X	1	A	**Note** ☒ **1** ☐ **2**	Pass
Y	1	A	**Note** ☒ **1** ☐ **2**	Pass
Z	1	A	**Note** ☒ **1** ☐ **2**	Pass

NOTE: 1. There was no change compared with initial operation during the test.
2. The loss of function of the EUT during the test and it was recovered by itself operation after the test.

8.9. VOLTAGE DIP & VOLTAGE INTERRUPTIONS

8.9.1. TEST SPECIFICATION

Basic Standard:	EN IEC 61000-4-11
Test duration time:	Minimum three test events in sequence
Interval between event:	Minimum 10 seconds
Phase Angle:	0 /45 / 90/ 135/ 180/ 225/ 270/ 315/ 360
Test cycle:	3 times
Performance criterion:	B,C

8.9.2. TEST INSTRUMENT

Immunity shielded room				
Equipment	**Manufacturer**	**Model**	**Serial Number**	**Calibration date**
Dips Tester	LIONCEL	VSD-1102	0181202	2025.05.21
Voltage-Stabilized Source	LIONCEL	RGL-220	0180901	2025.05.21
Voltage-Stabilized Source	LIONCEL	RGL-220	0180902	2025.05.21

NOTE: 1. The calibration interval of the above test instruments is 12 months and the calibrations are traceable to international system unit (SI).

2. N.C.R.= No Calibration required

8.9.3. TEST PROCEDURE

1. The EUT and support units were located on a wooden table, 0.8 m away from ground floor.
2. Setting the parameter of tests and then perform the test software of test simulator.
3. Conditions changes to occur at 0 degree crossover point of the voltage waveform.
4. Recording the test result in test record form.

8.9.4. TEST SETUP

For the actual test configuration, please refer to the related item – Photographs of the Test Configuration.

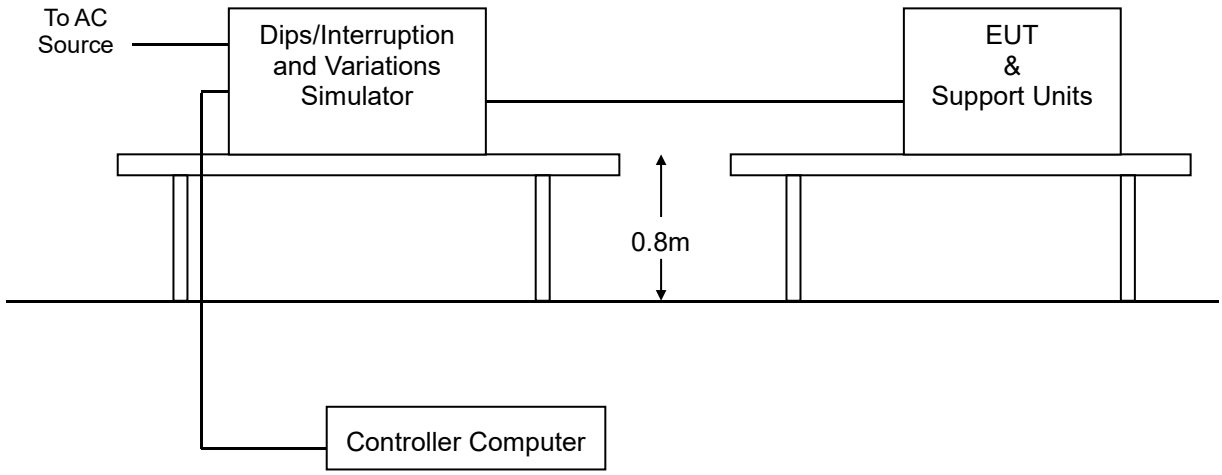

8.9.5. TEST RESULTS

Temperature:	25°C	**Humidity**	55% RH
Pressure	996mbar	**Test Result**	Pass
Test mode	Working	**Test By**	Jeremy Zhang

Test Power: 230Vac, 50Hz				
Voltage (% Reduction)	**Duration (Period)**	**Performance Criterion**	**Observation**	**Test Result**
40	10	☐A ☐B ☒C	Note ☐1 ☐2 ☒3	Pass
70	50	☐A ☐B ☒C	Note ☐1 ☐2 ☒3	Pass
0	0.5	☐A ☐B ☒C	Note ☐1 ☐2 ☒3	Pass

NOTE: 1.There was no change compared with initial operation during and after the test.
No unintentional response was found during the test.
2. The function stopped during the test, but can be recoverable by itself operation after the test.
3. The function stopped during the test, but can be recoverable manually after the test.

9 PHOTOGRAPHS OF EUT

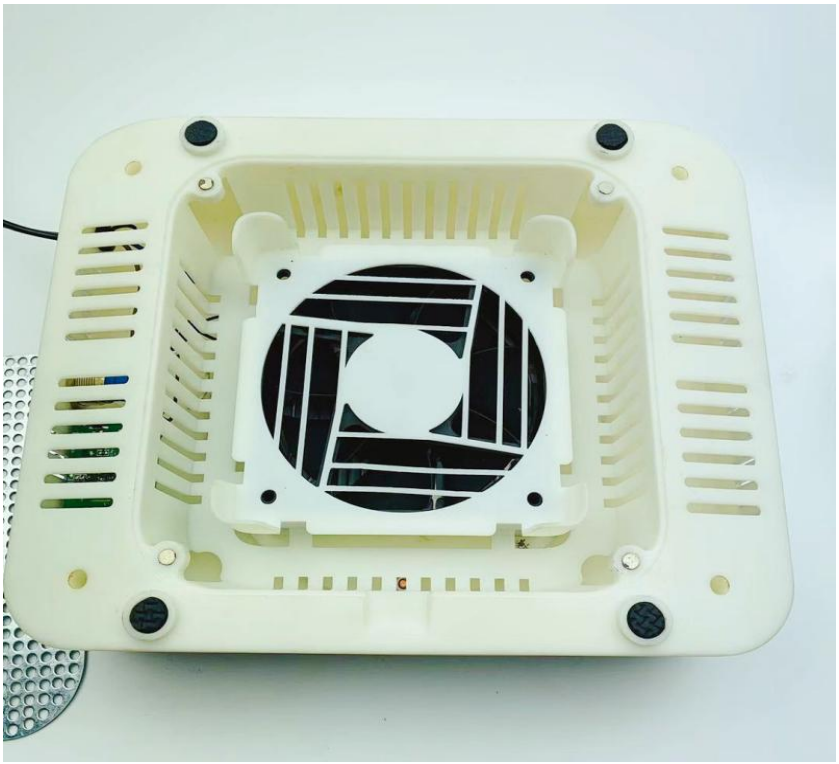





Hotline: 400-6655-351 Tel: 0755-23595200 Fax: 0755-23595201 http://www.httprc.com.